Kawasaki

BOXER CT-UG

Catálogo de Partes

INDEX

PLATE No.	DESCRIPTION	PAGE No.
1	CYLINDER HEAD	1
2	VALVE	2
3	CAMSHAFT / TENSIONER (BOXER CT)	3
4	CYLINDER AND PISTON	4
5	CRANK SHAFT	5
6	TRANSMISSION	6
7	CHANGE DRUM / SHIFT FORK	7
8	GEAR CHANGE MECHANISM	8
9	CRANKASE RH / ENGINE ASSLY.	9
10	CRANKASE -L.H. / PIPE OIL	10
11	ENGINE COVER	11
12	CLUTCH	12
13	KICK STARTER MECHANISM	13
14	CARBURETTOR (KEIHIN-FIE)	14
15	AIR CLEANER ASSLY. COMP.	15
16	MUFFLER	16
17	OIL PUMP	17
18	MAGNETO ASSLY (INEL)	18
19	MAGNETO ASSLY (VARROC)	19
20	FRAME AND STAY	20
21	FRAME FITTING	21
22	SWING ARM / REAR SHOCK ABSORBER	22

PLATE No.	DESCRIPTION	PAGE No.
23	STAND AND STEP	23
24	FENDER (MUDGUARD)	24
25	WHEEL RIM/SPOKES/TYRE/TUBE	25
26	FRONT HUB	26
27	REAR HUB	27
28	BRAKE PEDAL	28
29	HANDLE BAR	29
30	FORK FRONT	30
31	PAINTED PARTS	31
32	FUEL TANK CAP, TAP ASSLY, FUEL FILTER	32
33	CHAIN CASE	33
34	FITTING - PETROL TANK & SIDE COVER	34
35	METER ASSEMBLY	35
36	CONTROL CABLES	36
37	HEAD LAMP ASSLY	37
38	TURN SIGNAL LAMP	38
39	TAIL LAMP ASSLY	39
40	ELECTRICAL EQUIPMENT	40
41	TOOL KIT	41
42	SEAT ASSLY	42
43	ACCESORIES (OPTIONAL)	43

PICTORIAL INDEX

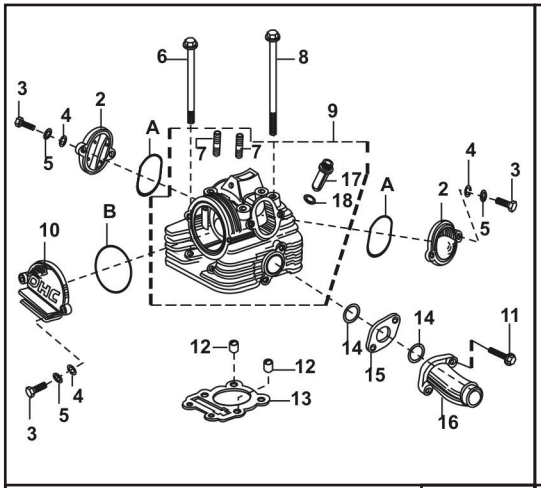

PLATE Nº 1: CYLINDER HEAD	PAGE No. 1

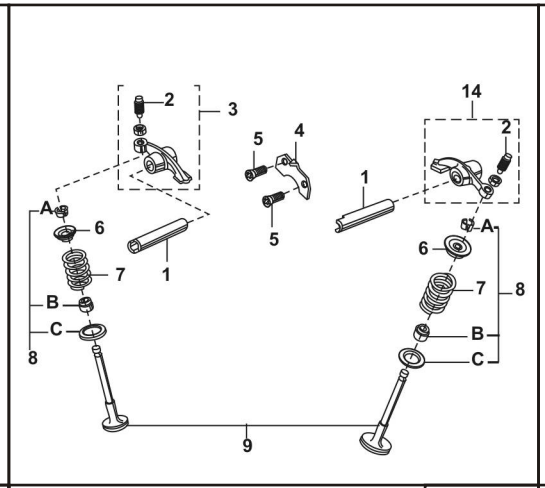

PLATE Nº 2: VALVE	PAGE No. 2

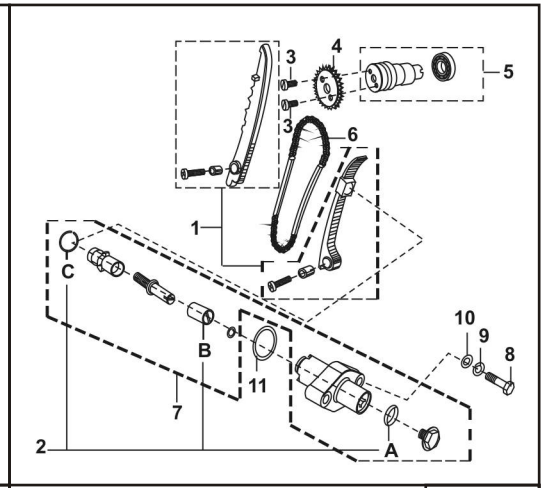

PLATE Nº 3: CAMSHAFT / TENSIONER	PAGE No. 3

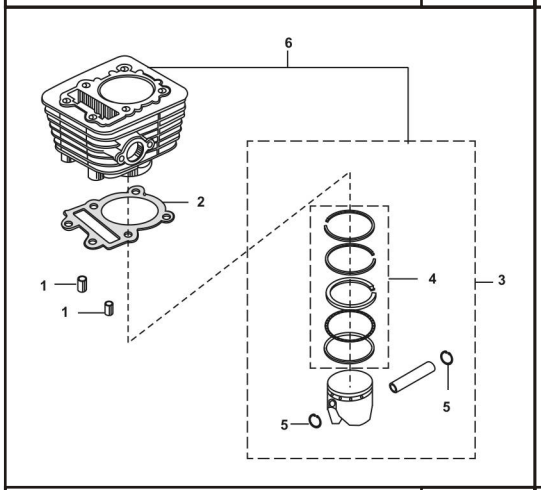

PLATE Nº 4: CYLINDER AND PISTON	PAGE No. 4

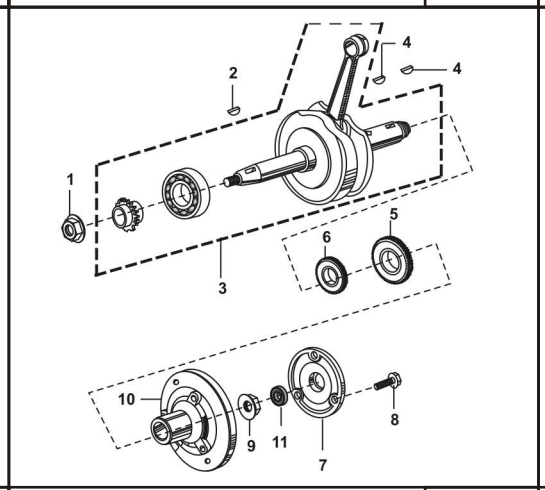

PLATE Nº 5: CRANK SHAFT	PAGE No. 5

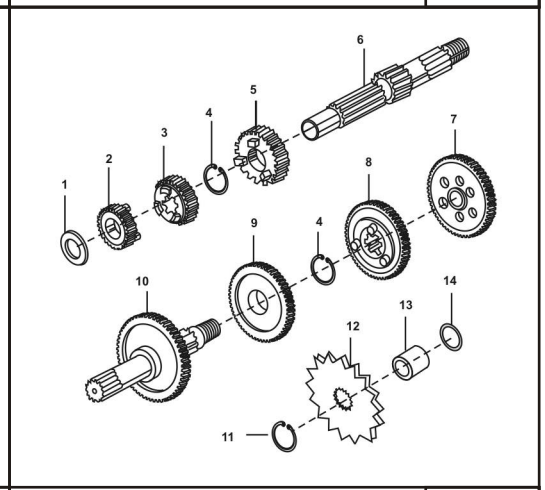

PLATE Nº 6: TRANSMISSION	PAGE No. 6

PICTORIAL INDEX

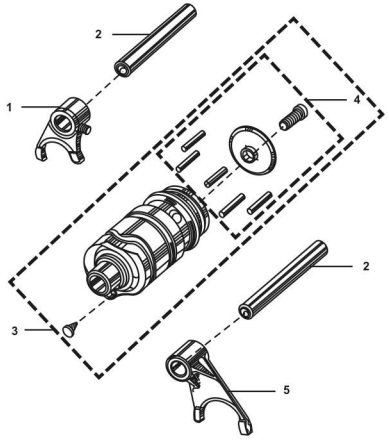

PLATE Nº 7: CHANGE DRUM/SHIFT FORK	PAGE No. 7

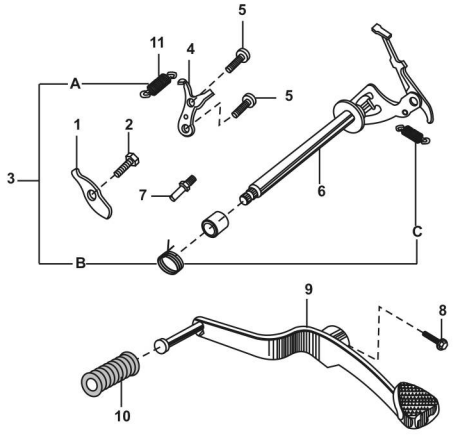

PLATE Nº 8: GEAR CHANGE/MECHANISM	PAGE No. 8

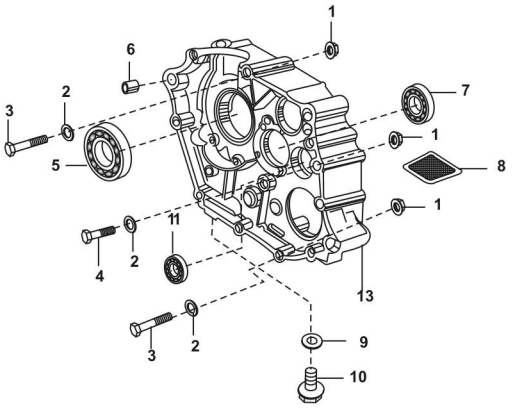

PLATE Nº 9: CRANKCASE RH/ENGINE ASSLY	PAGE No. 9

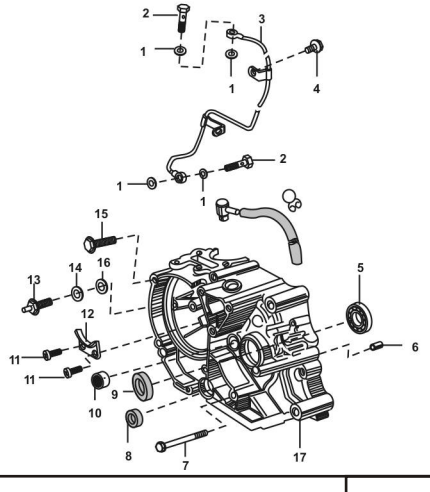

PLATE Nº 10: CRANKASE - L.H./PIPE OIL	PAGE No. 10

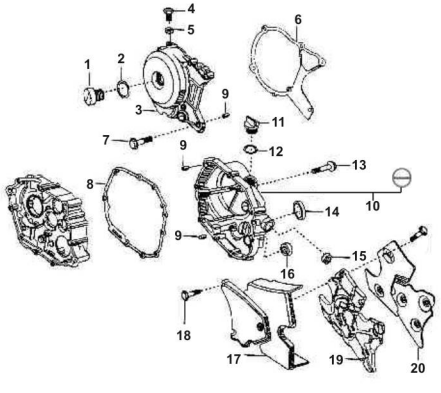

PLATE Nº 11: ENGINE COVER	PAGE No. 11

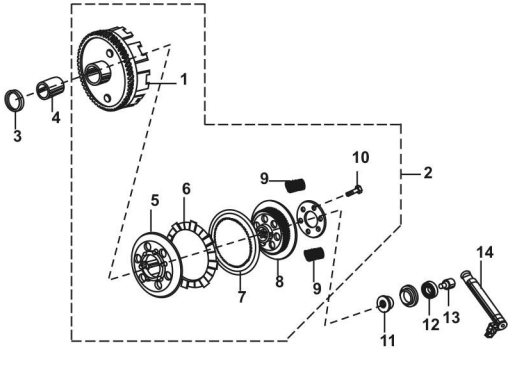

PLATE Nº 12: CLUTCH	PAGE No. 12

PICTORIAL INDEX

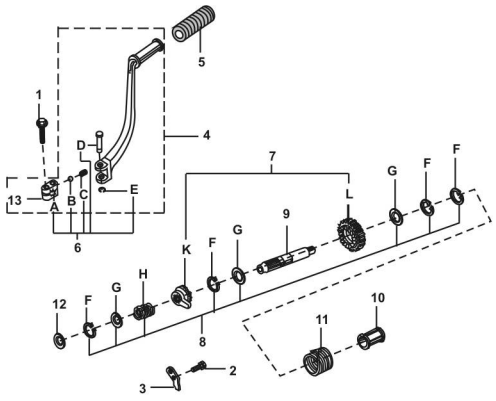

PLATE Nº 13: KICK STARTER MECHANISM	PAGE No. 13

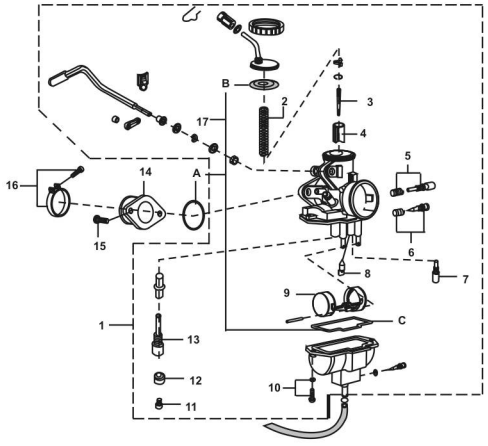

PLATE Nº 14: CARBURETOR (KEIHIN-FIE)	PAGE No. 14

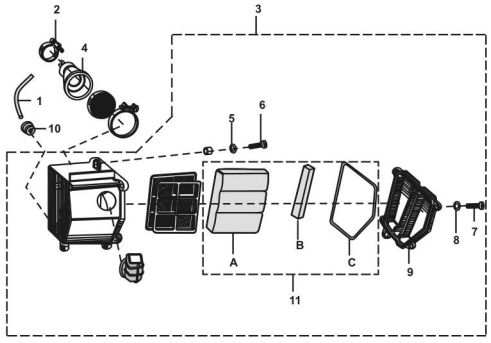

PLATE Nº 15: AIR CLEANER ASSLY. COMP	PAGE No. 15

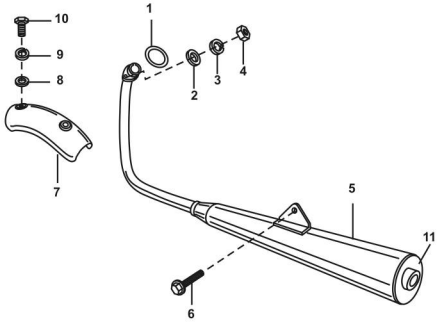

PLATE Nº 16: MUFFLER	PAGE No. 16

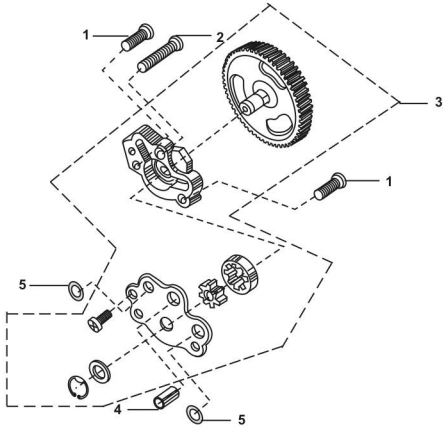

PLATE Nº 17: OIL PUMP	PAGE No. 17

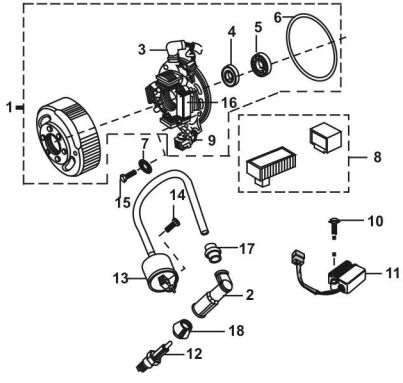

PLATE Nº 18: MAGNETO ASSLY (INEL) PLATE N° 19: MAGNETO ASSLY (VARROC)	PAGE No. 18 - 19

PICTORIAL INDEX

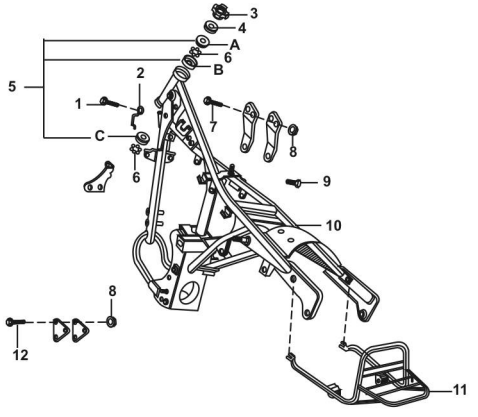

PLATE Nº 20: FRAME AND STAY	PAGE No. 20

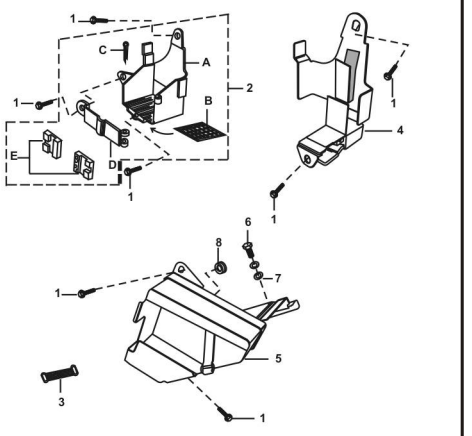

PLATE Nº 21: FRAME FITTING	PAGE No. 21

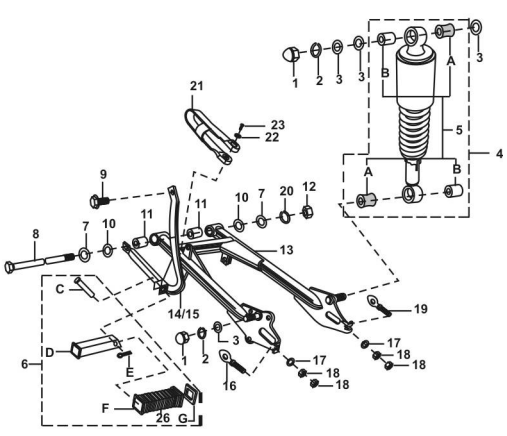

PLATE Nº 22 SWING ARM/REAR SHOCK ABSORBER	PAGE No. 22

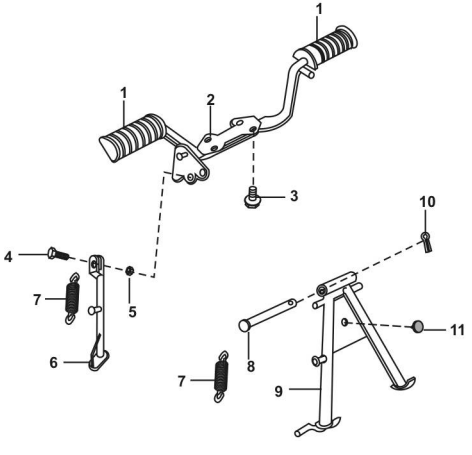

PLATE Nº 23: STAND AND STEP	PAGE No. 23

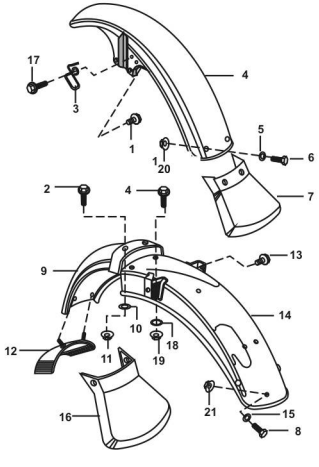

PLATE Nº 24: FENDER (MUDGUARD)	PAGE No. 24

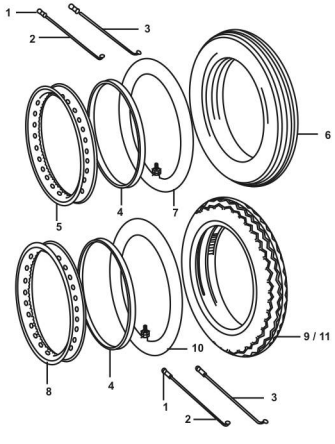

PLATE Nº 25: WHEEL RIM/SPOKES/ TYRE/TUBE	PAGE No. 25

PICTORIAL INDEX

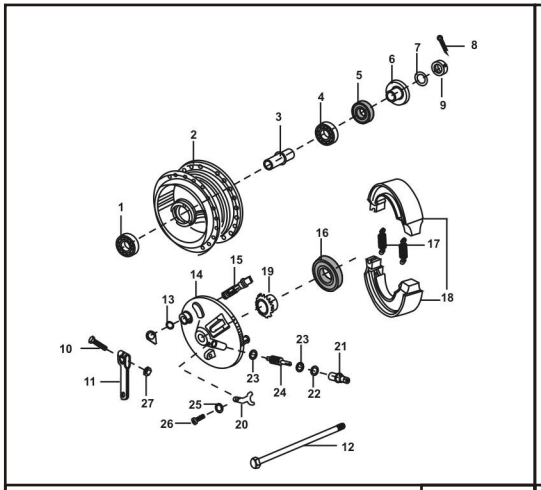

PLATE Nº 26: FRONT HUB	PAGE No. 26

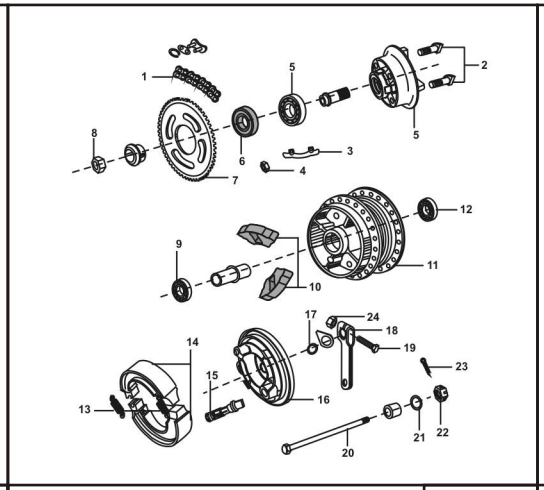

PLATE Nº 27: REAR HUB	PAGE No. 27

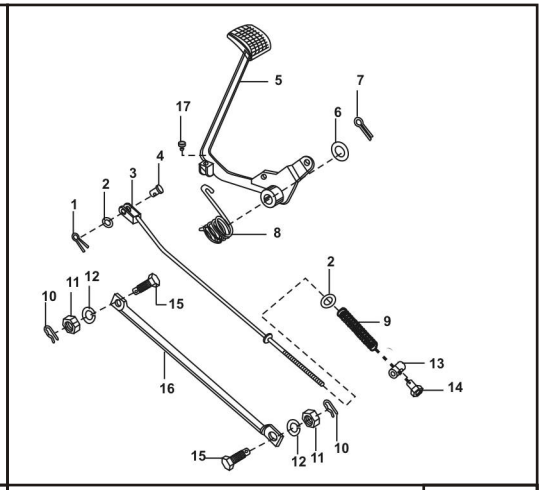

PLATE Nº 28: BREAK PEDAL	PAGE No. 28

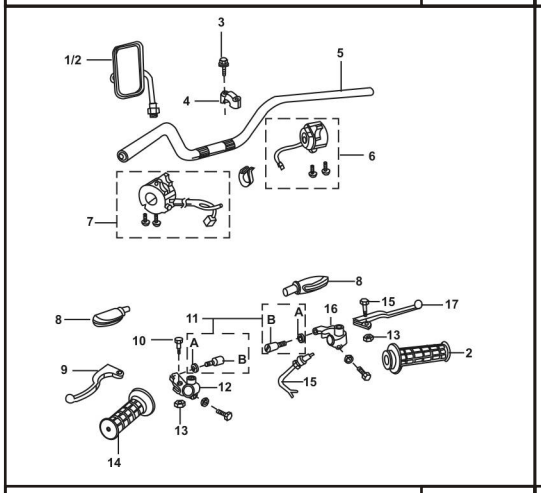

PLATE Nº 29: HANDLE BAR	PAGE No. 29

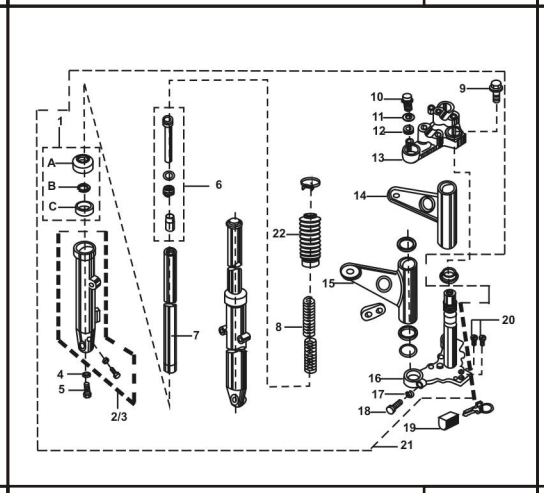

PLATE Nº 30: FORK FRONT	PAGE No. 30

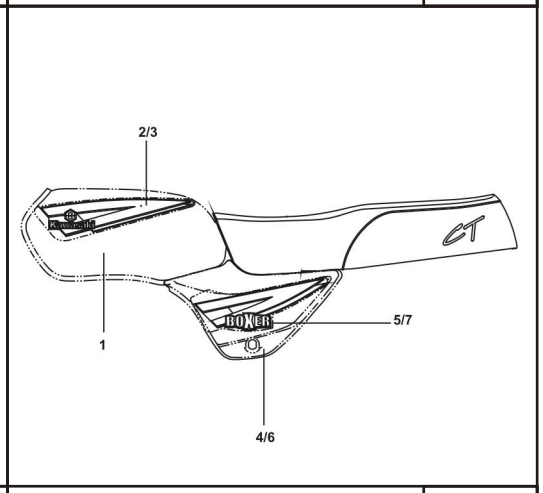

PLATE Nº 31: PAINTED PARTS	PAGE No. 31

PICTORIAL INDEX

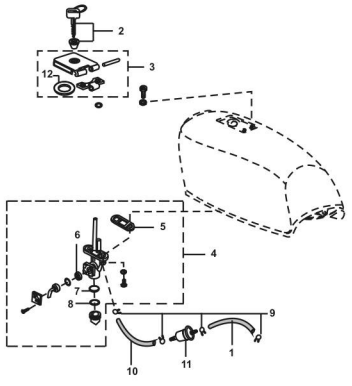

PLATE Nº 32: FUEL TANK CAP, TAP ASSLY, FUEL FILTER	PAGE No. 32

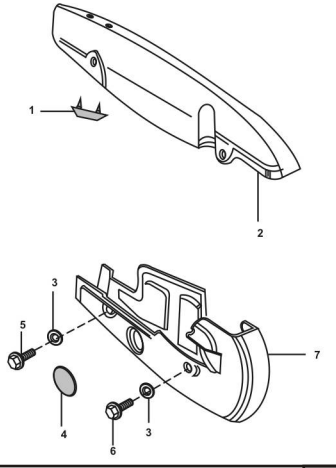

PLATE Nº 33: CHAIN CASE	PAGE No. 33

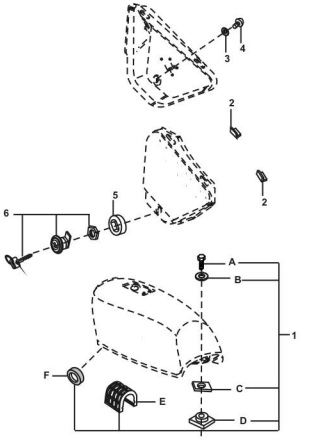

PLATE Nº 34: FITTING - PETROL TANK & SIDE COVER	PAGE No. 34

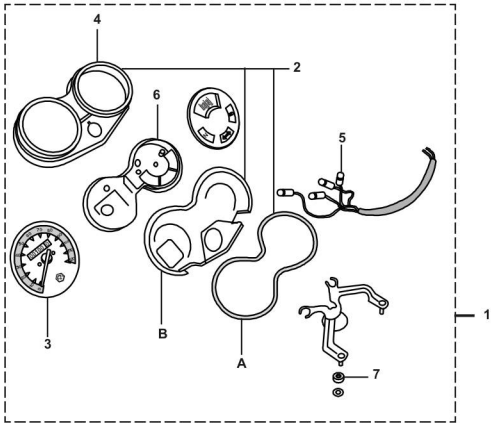

PLATE Nº 35: METER ASSEMBLY	PAGE No. 35

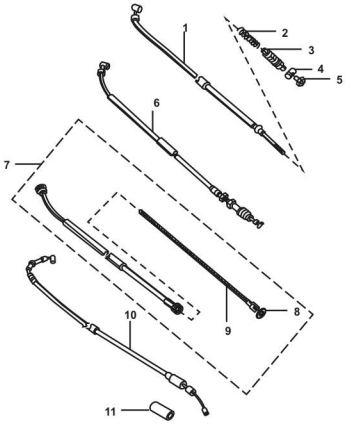

PLATE Nº 36: CONTROL CABLES	PAGE No. 36

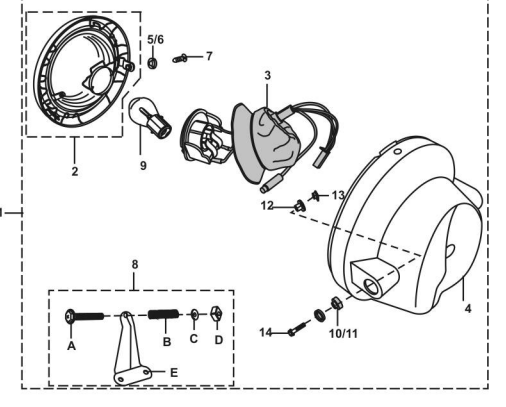

PLATE Nº 37: HEAD LAMP ASSLY	PAGE No. 37

PICTORIAL INDEX

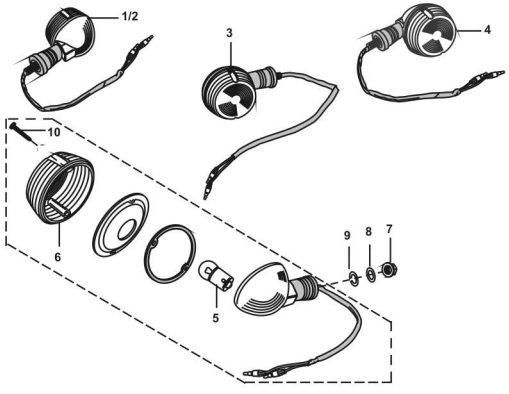

PLATE Nº 38: TURN SIGNAL LAMP	PAGE No. 38

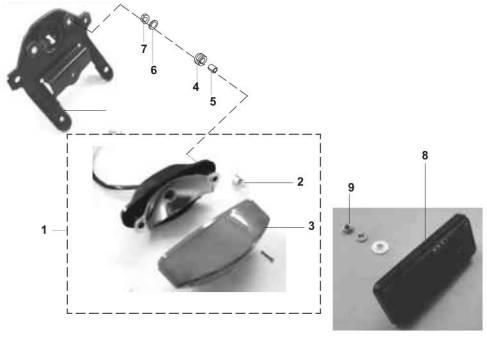

PLATE Nº 39: TAIL LAMP ASSLY	PAGE No. 39

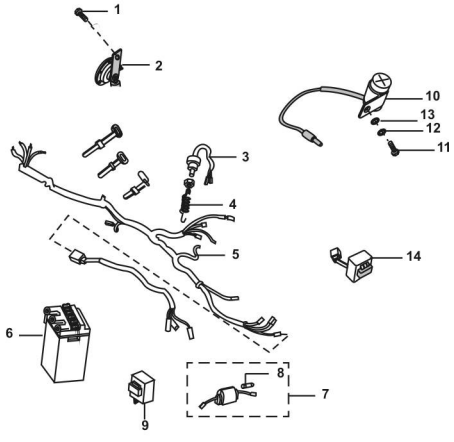

PLATE Nº 40: ELECTRICAL EQUIPMENT	PAGE No. 40

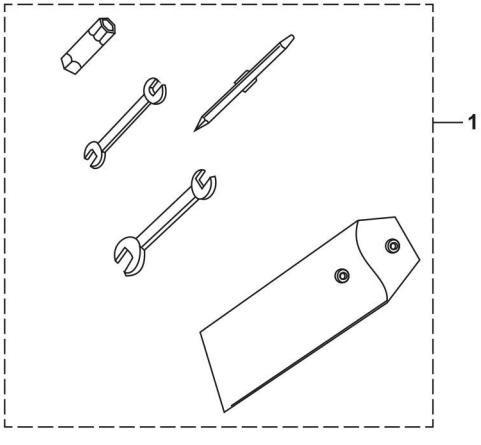

PLATE Nº 41: TOOL KIT	PAGE No. 41

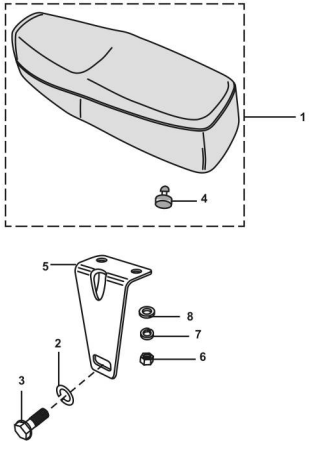

PLATE Nº 42: SEAT ASSLY	PAGE No. 42

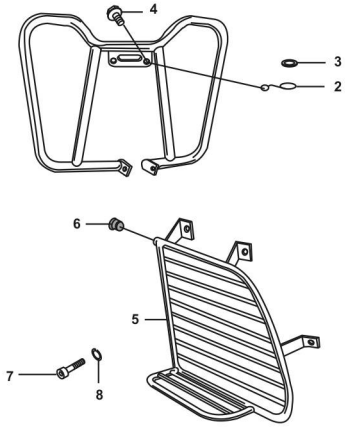

PLATE Nº 43: ACCESORIES	PAGE No. 43

PLATE No. 1: CYLINDER HEAD

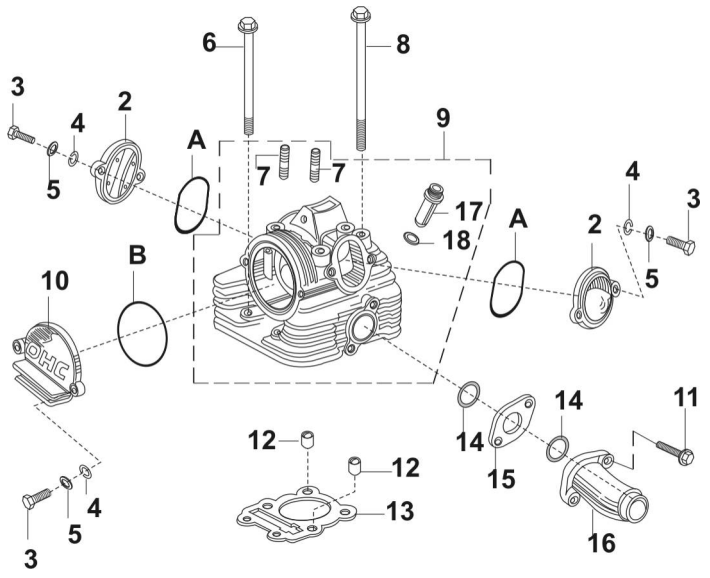

FIG. No.	PART. No.	DESCRIPTION	QTY/ VEH.	REMARKS
1	36-DF10-01	“O” Ring Kit	1	(Set of A&B) Ref.Page N° 44
2	31-1010-06	Cap	2	
3	39-1063-01	Hex Screw	6	
4	39-0132-12	Washer Spring	6	
5	39-0198-11	Plain Washer	6	
6	39-1012-04	Bolt	2	Alt. to DD-1013-47
7	DD-1012-76	Stud	2	Alt. to DD-1013-50
8	39-1877-04	Bolt	4	Alt. to DD-1013-49
9	31-1011-30	Head Comp.Cylinder	1	
10	31-1010-07	Cover(OHC)	1	
11	39-1074-04	Bolt	2	Alt. to DD-1013-51
12	39-1000-06	Hollow Dowel Pin	2	
13	31-1012-77	Gasket Head	1	
14	39-1017-21	Ring	2	
15	31-1011-75	Insulator	1	
16	31-1011-32	Pipe Intake	1	
17	31-1010-05	Guide Valve	2	
18	39-1021-21	Ring “O”	2	

PLATE No. 2: VALVE

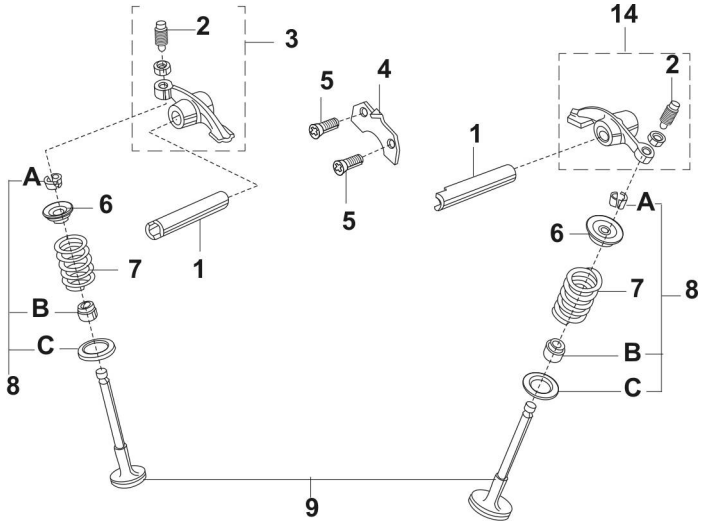

FIG. No.	PART. No.	DESCRIPTION	QTY/ VEH.	REMARKS
1	31-1010-21	Shaft Rocker	2	
2	DD-1013-06	Screw 100	2	
3	31-1012-35	Rocker arm assembly	2	
4	31-1011-04	Stopper	1	
5	39-0702-01	Screw Pan Cros	2	
6	31-1010-18	Retainer Valve Spring	2	
7	DD-1012-11	Spring Stiffer	2	
8	36-3110-08	Collet Seal oil Kit	1	(Set of A,B & C)
				Ref. Page N° 44
9	36-3110-28	Valve Kit	1	Ref. Page N° 44

PLATE No. 3: CAMSHAFT / TENSIONER

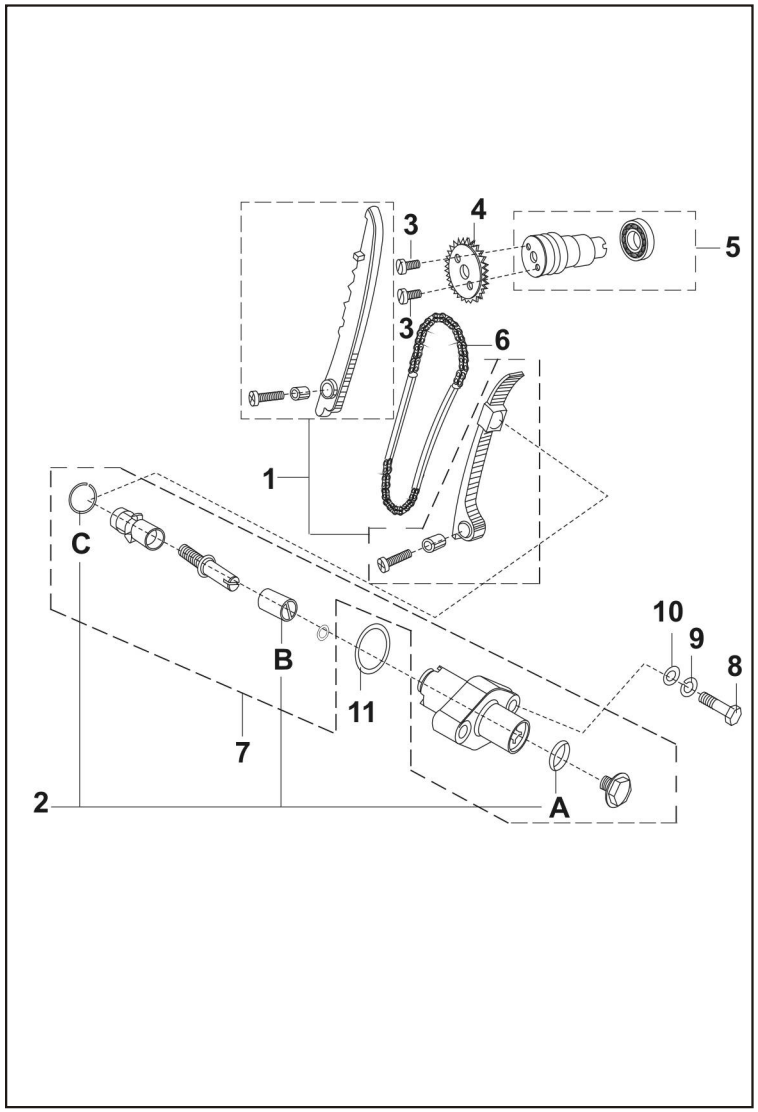

FIG. No.	PART. No.	DESCRIPTION	QTY/ VEH.	REMARKS
1	36-3110-06	Guide Chain Kit	1	Ref. Page N° 44
2	36-DF10-02	Tensioner Part Kit	1	(Set of A,B & C)
				Ref. Page N° 44
3	22-1504-51	Screw	2	
4	31-1010-24	Sprocket (28T)	1	
5	DD-1010-63	Camchaft Comp	1	
6	31-1010-33	Chain	1	
7	DD-1012-55	Tensioner Assembly(Adeep)	1	
	DD-1011-79	Tensioner Assembly(Advik)	1	
8	39-1070-01	Hex Screw	2	
9	39-0732-12	Washer Spring	2	
10	39-0198-11	Plain Washer	2	
11	39-2040-21	Ring “O”	1	

PLATE No. 4: CYLINDER AND PISTON

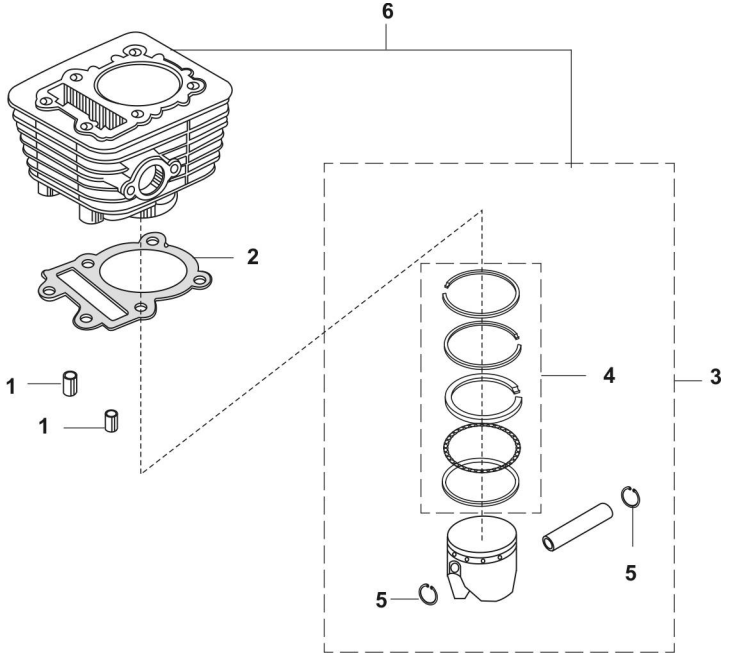

FIG. No.	PART. No.	DESCRIPTION	QTY/ VEH.	REMARKS
1	39-1000-06	Hollow dowel pin	2	
2	DD-1010-07	Gasket	1	
3	31-1011-82	Piston assly std	1	
	31-1011-82-STD/47	Piston assly std		
	31-1011-82-025/47	Piston assly 0.25		
	31-1011-82-050/47	Piston assly 0.50		
	31-1011-82-075/47	Piston assly 0.75		
	31-1011-82-100/47	Piston assly 1.00		
4	31-1012-49	Piston ring set std.	1	
	31-1012-49-STD/47	Piston ring set std.		
	31-1012-49-025/47	Piston ring set 0.25		
	31-1012-49-050/47	Piston ring set 0.50		
	31-1012-49-075/47	Piston ring set 0.75		
	31-1012-49-100/47	Piston ring set 1.00		
5	39-0985-17	Wire Circlip	2	
6	31-1013-14	Cylinder Block Piston assly	1	

PLATE No. 5: CRANK SHAFT

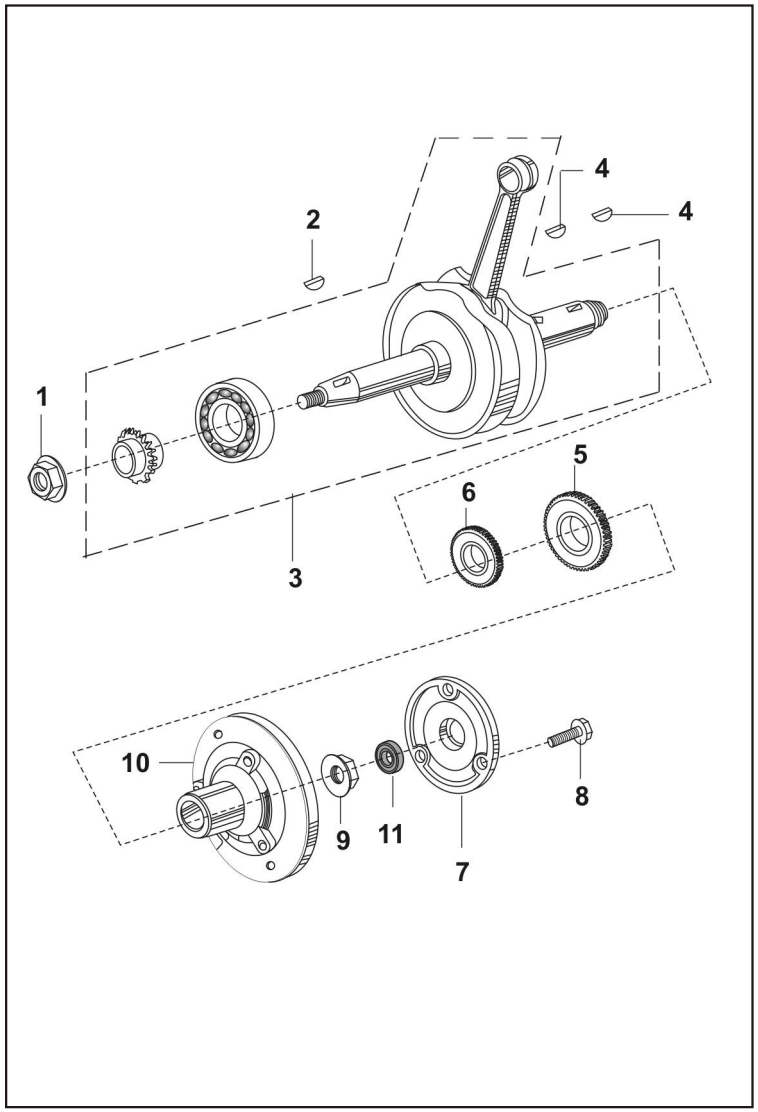

FIG. No.	PART. No.	DESCRIPTION	QTY/ VEH.	REMARKS
1	39-1055-15	Nut	1	
2	01-1006-10	Woodruff Key	1	
3	DF-1010-51	Crankshaft Comp.	1	
4	31-1011-73	Key Woodruff	2	
5	31-1010-76	Gear Primary Helical (23 T)	1	
6	31-1010-75	Gear (21T)	1	
7	31-1210-07	Cover	1	
8	39-1672-04	Flanged bolt	3	
9	39-1053-15	Nut	1	
10	31-1011-18	Filter	1	
11	39-1046-19	Seal Oil	1	

PLATE No. 6: TRANSMISSION

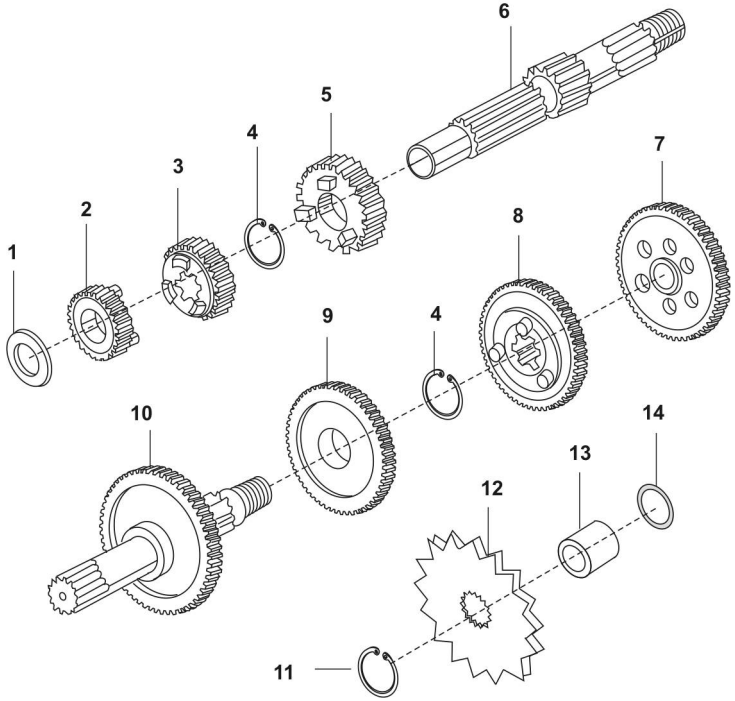

FIG. No.	PART. No.	DESCRIPTION	QTY/ VEH.	REMARKS
1	39-0994-11	Plain washer	1	
2	DD-1010-92	Gear Transmission Spur(2nd)	1	
3	31-1010-79	Gear Transmission Spur(3nd)	1	
4	39-0987-17	Ring Snap (16mm)	2	
5	31-1010-82	Gear Transmission Spur(Top)	1	
6	31-1012-19	Shaft Transmission Input(1st)	1	
7	31-1012-21	Gear Transmission Spur (Low)	1	
8	31-1010-84	Gear Transmission Spur (Top)	1	
9	31-1010-83	Gear Transmission Spur (3rd)	1	
10	31-1010-80	Shaft Transmission Out (2nd)	1	
11	39-0989-17	Circlip	1	
12	DD-1011-36	Sprocket Output	1	
13	31-1012-16	Collar (Sintered)	1	Alt. to 31-1011-17
14	39-1018-21	“O” ring	1	

PLATE No. 7: CHANGE DRUM / SHIFT FORK

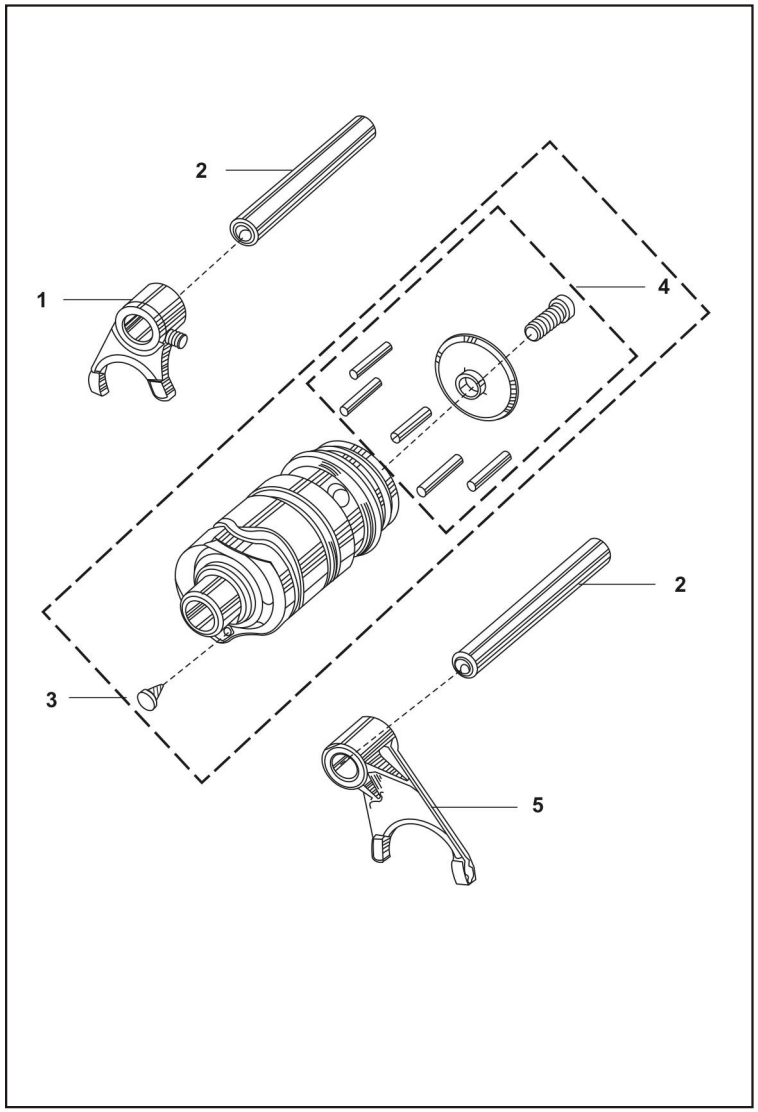

FIG. No.	PART. No.	DESCRIPTION	QTY/ VEH.	REMARKS
1	31-1011-91	Fork Shift	1	Alt. to 31-1010-81
2	31-1010-51	Rod shift	2	
3	31-1011-68	Drum assly change	1	
4	36-3110-02	Holder for Drum Kit	1	Ref. Page N°44
5	31-1011-92	For shift	1	Alt. to 31-1010-47

PLATE No. 8: GEAR CHANGE MECHANISM

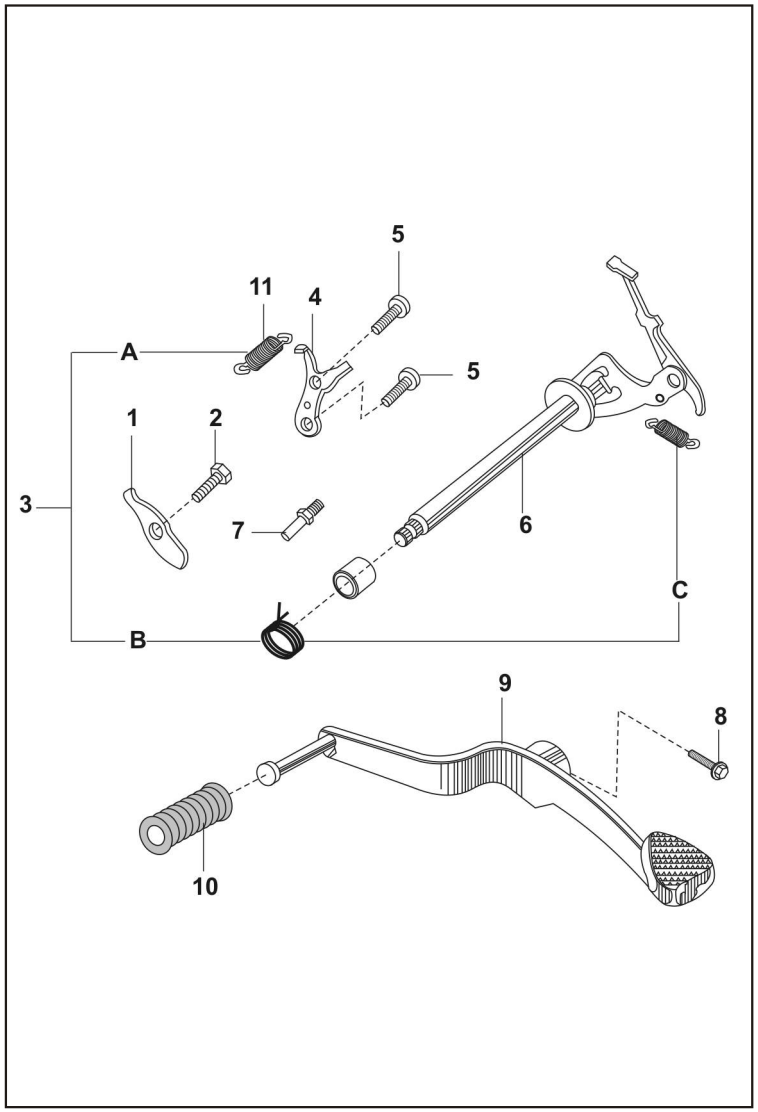

FIG. No.	PART. No.	DESCRIPTION	QTY/ VEH.	REMARKS
1	DD-1013-04	Lever	1	
2	30-1010-86	Bolt	1	
3	36-3110-10	Spring Kit	1	(Set of A,B & C)
				Ref. Page N° 44
4	31-1011-05	Plate Position	1	
5	39-0746-01	Screw Pan Cros	2	
6	DD-1010-77	Lever Comp. Change Shaft	1	
7	DD-1011-06	Bolt	1	
8	39-2474-04	Flanged bolt	1	
9	DD-1010-71	Lever Change	1	
10	31-1011-08	Damper	1	
11	DD-1012-98	Spring	1	

PLATE No. 9: CRANKCASE RH / ENGINE ASSLY

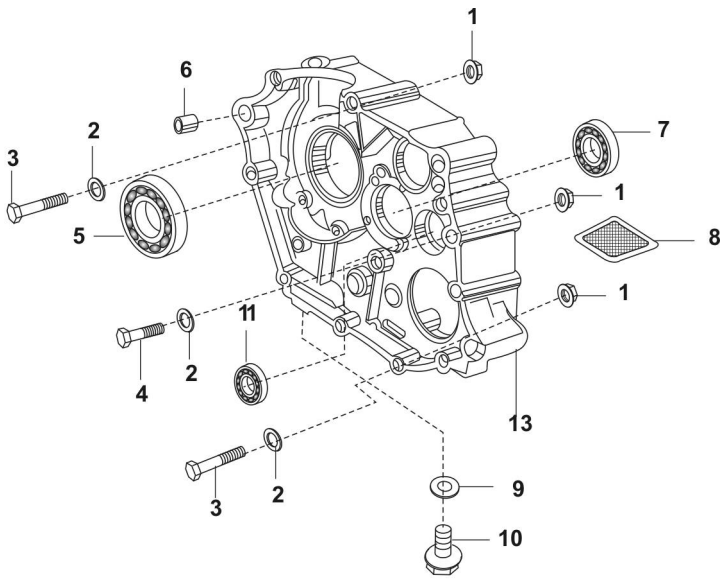

FIG. No.	PART. No.	DESCRIPTION	QTY/ VEH.	REMARKS
1	39-1225-15	Nut	3	
2	39-0248-11	Plain Washer	3	
3	39-1068-04	Bolt	2	
4	39-1056-04	Bolt	1	
5	39-1864-20	Bearing Ball	1	Alt. to 39-2293-20
6	39-0999-06	Dowel pin	3	
7	01-1701-11	Bearing	1	
8	31-1211-00	Oil Strainer	1	
9	DG-1014-98	Gasket	1	
10	DD-1012-75	Plug	1	
11	01-1701-10	Bearing	1	
12	DF-1010-15	Engine Assembly	1	N.I.
13	DD-1011-02	Crank case RH	1	
14	DD-1011-03	Crank case assly	1	Crank case LH & RH (N.I.)

PLATE No. 10 : CRANKCASE - L.H. / PIPE OIL

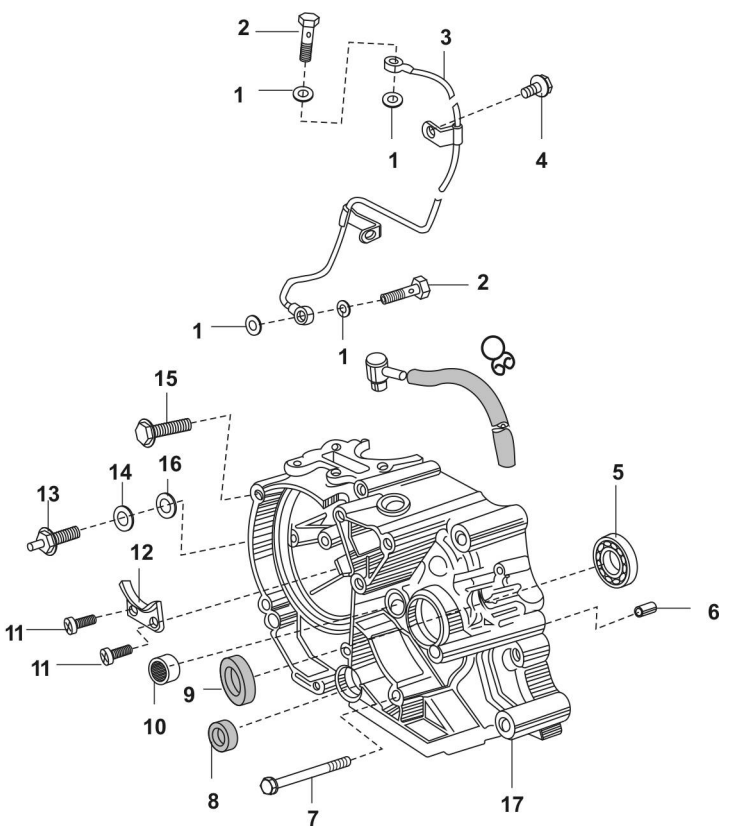

FIG. No.	PART. No.	DESCRIPTION	QTY/ VEH.	REMARKS
1	31-1210-06	Gasket	4	
2	39-1023-04	Bolt	2	
3	31-1210-34	Pipe Oil	1	
4	39-1062-04	Bolt Flanged Small	1	
5	01-1701-11	Ball Bearing	1	
6	39-1050-06	Dowel Pin	1	
7	39-1066-04	Bolt Flanged Small	3	
8	39-1043-19	Oil Seal	1	
9	39-1080-19	Seal Oil	1	
10	39-1008-20	Bearing Needle	1	
11	39-0702-01	Screw Pan Cross	2	
12	31-1010-56	Guide	1	
13	31-2010-81	Switch Comp	1	
14	39-0703-11	Plain Washer	*	* as required
15	39-1075-04	Bolt Flanged Small	6	
16	30-1010-15	Gasket	1	
17	DD-1011-01	Crank case LH	1	

PLATE No. 11: ENGINE COVER

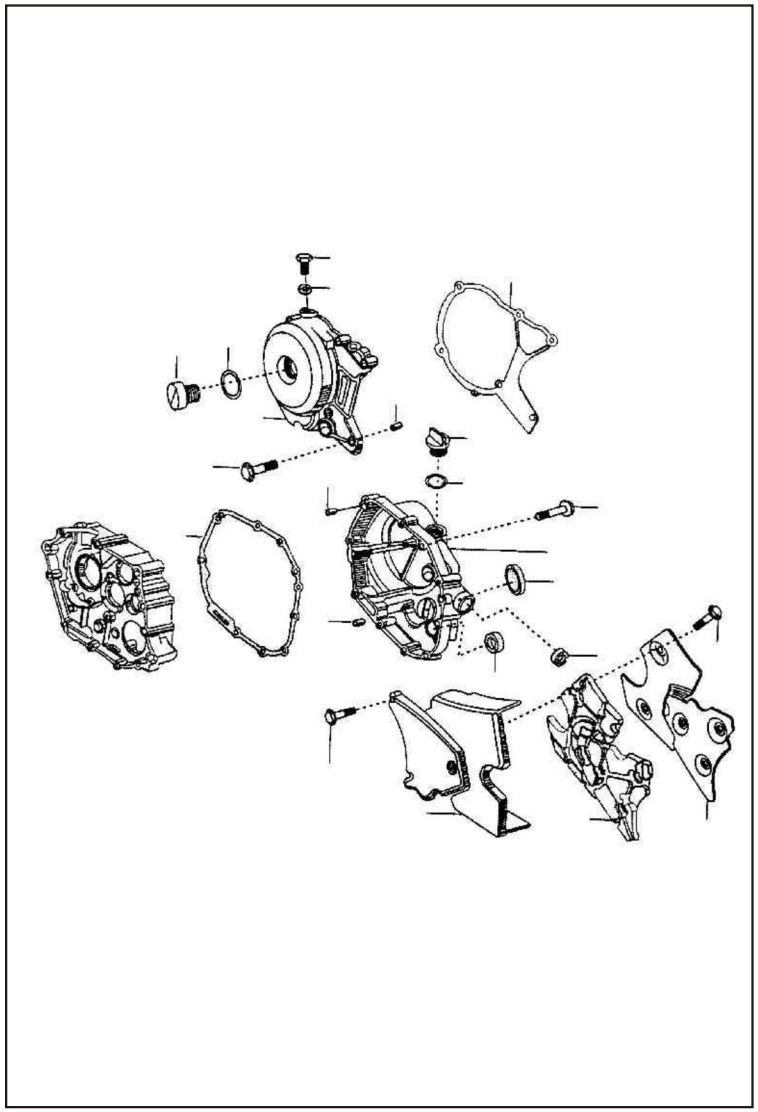

FIG. No.	PART. No.	DESCRIPTION	QTY/ VEH.	REMARKS
1	31-1010-62	Bolt	1	
2	39-1019-21	Ring “O”	1	
3	31-1012-95	Cover Generator	1	
4	31-1010-61	Plug	1	
5	31-1011-13	Gasket	1	
6	DD-1010-58	Gasket	1	
7	39-1074-04	Bolt Flanged Small	5	
8	DD-1010-60	Gasket	1	
9	39-0999-06		4	
10	DF-1010-18	Clutch Cover / Graphics	1	
11	DD-1013-25	Cap Oil Filter	1	From Dec. 2001
	DD-1011-21	Cap Oil Filter	1	Upto. Nov.2001
12	39-2134-21	Ring “O”	1	
13	39-1075-04	Bolt Flanged Small	10	
14	31-1010-67	Gauge (Oil Window)	1	
15	30-1011-42	Seal Oil	1	
16	39-1041-19	Seal Oil	1	
17	DD-1010-43	Cover Chain assly	1	
18	39-2147-04	Bolt Flanged Small	3	
19	DD-1010-75	Damper	1	
20	DD-1010-76	Plate	1	

PLATE No. 12: CLUTCH

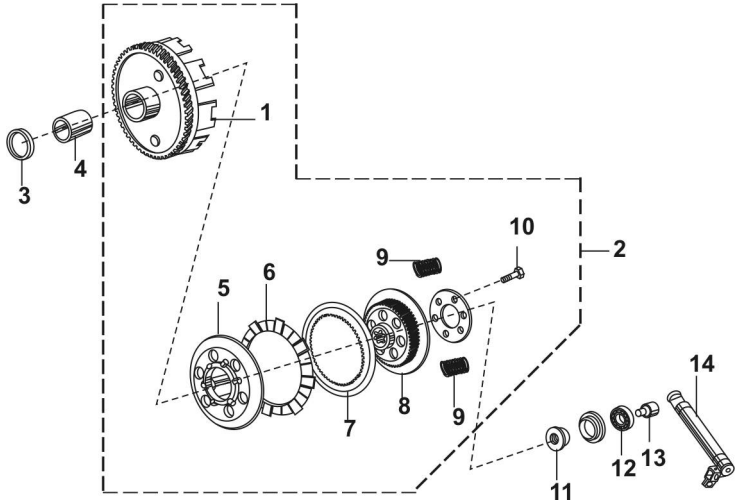

FIG. No.	PART. No.	DESCRIPTION	QTY/ VEH.	REMARKS
1	DD-1010-69	Housing Comp.Clutch	1	
2	DD-1010-70	Clutch Assly	1	
3	39-1058-11	Plain Washer	1	
4	31-1011-46	Collar	1	
5	31-1011-35	Wheel Clutch	1	
6	DD-1010-99	Plate Friction	4	
7	30-1010-96	Plate Clutch	3	
8	31-1011-36	Hub Clutch	1	
9	30-1010-98	Spring	6	
10	39-0980-04	Hex. Bolt	6	
11	39-1053-15	Nut	1	
12	39-2403-20	Bearing	1	
13	31-1011-48	Rod Push	1	
14	31-1011-44	Lever Complete	1	

PLATE No. 13: KICK STARTER MECHANISM

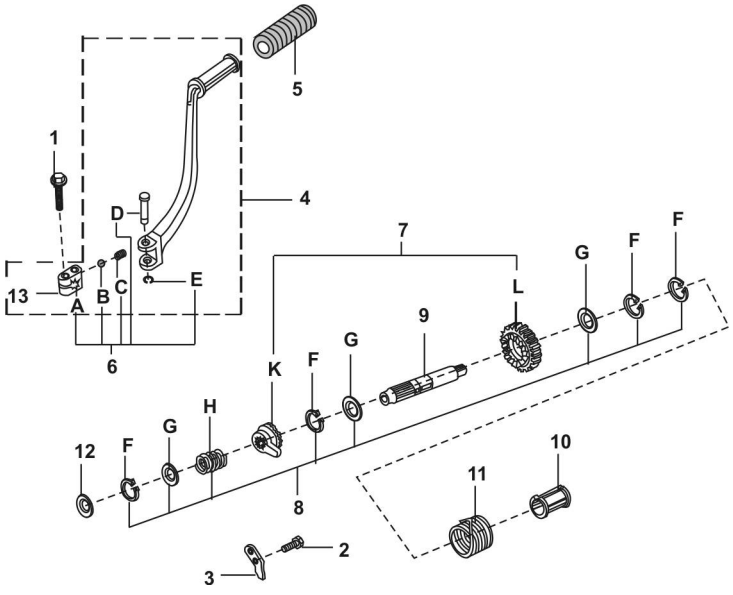

FIG. No.	PART. No.	DESCRIPTION	QTY/ VEH.	REMARKS
1	39-2474-04	Flanged bolt	1	
2	39-1920-01	Screw Pan Cross	2	
3	DD-1012-54	Guide Kick	1	
4	DD-1013-27	Lever Assly Kick	1	
5	30-1011-54	Bush (Damper)	1	
6	36-3110-27	Boss Kick set A to E	1	Ref. Page N° 44
7	36-DF10-03	Ratcher & Gear set K & L	1	Ref. Page N° 44
8	36-3110-20	Circlip & washer set F to H	1	Ref. Page N° 44
9	31-1011-24	Shaft Kick	1	
10	31-1010-40	Guide	1	
11	31-1010-41	Spring	1	
12	39-0933-11	Washer	1	
13	DD-1013-30	Boss Kick	1	

PLATE No. 14: CARBURETTOR (KEIHIN - FIE)

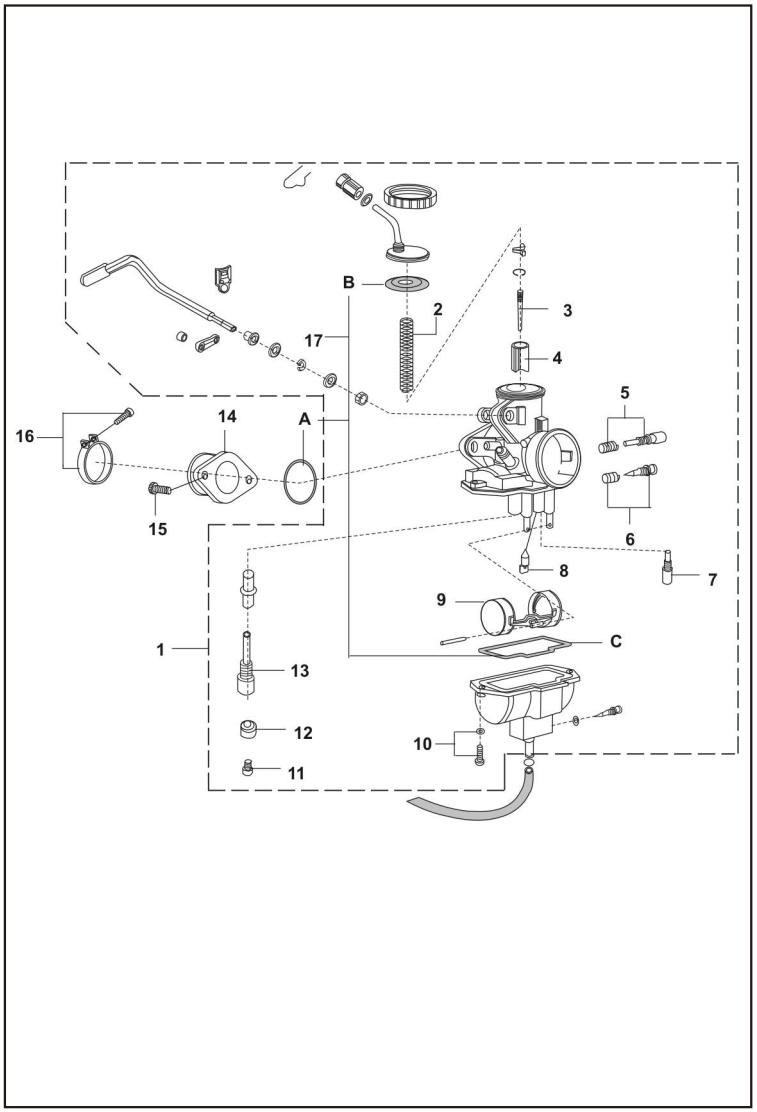

FIG. No.	PART. No.	DESCRIPTION	QTY/ VEH.	REMARKS
1	31-1211-48	Carburettor Assly(Keihin PC 18)	1	Alt. 31-1211-66
2	31-1210-59	Spring Throttle	1	
3	31-1211-55	Jet Needle(N7EB)	1	
4	31-1210-55	Valve Throttl(28B)	1	
5	36-DF12-01	Screw(Idling) Kit	1	Ref. Page N° 45
6	36-DF12-02	Screw(AirControl) Kit	1	Ref. Page N° 45
7	31-1210-70	Slow jet	1	
8	31-1210-71	Valve Complete	1	
9	31-1210-72	Float Complete	1	
10	31-1210-69	Screw	2	
11	31-1210-77	Main Jet(78)	1	
12	31-1210-78	Holder	1	
13	31-1210-79	Holder	1	
14	31-1210-08	Holder	1	
15	39-0972-04	Bolt Socket	2	
16	31-1210-15	Clamp	1	Al.to 31-1211-34
17	36-DF12-03	Gasket “O” ring Kit	1	Ref. Page N° 45

PLATE No. 15: AIR CLEANER ASSLY. COMP.

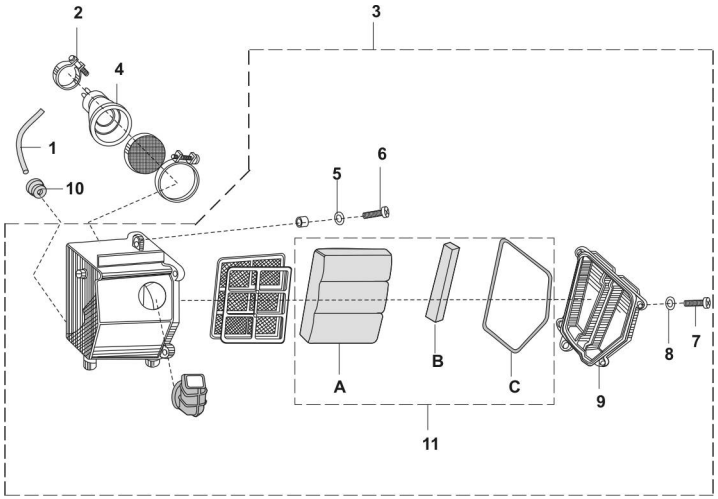

FIG. No.	PART. No.	DESCRIPTION	QTY/ VEH.	REMARKS
1	31-1210-50	Tube (Air vent)	1	
2	31-1210-14	Clamp	1	
3	31-1210-16	Filter Assly Air	1	
4	31-1210-28	Duct	1	
5	39-0711-11	Washer plain	2	
6	39-0747-01	Screw Pan Cros	2	
7	39-0830-01	Screw Pan Cros	4	
8	01-1106-09	Plain Washer	4	
9	31-1210-23	Cap	1	
10	39-1189-23	Grommet	1	
11	36-DF14-11	Air Filter Kit	1	(Set A,B & C)
				Ref. Page N° 45

PLATE No. 16: MUFFLER

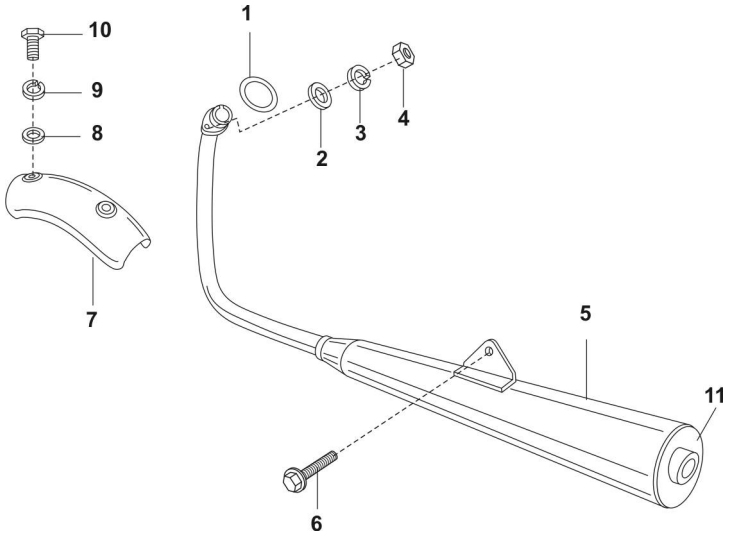

FIG. No.	PART. No.	DESCRIPTION	QTY/ VEH.	REMARKS
1	31-1010-14	Gasket	1	
2	39-0198-11	Plain Washer	2	
3	39-0732-12	Spring Washer	2	
4	39-2145-15	Nut	2	
5	DD-1012-15	Muffler	1	
6	39-2477-04	Flanged Bolt	1	Alt. to DD-1013-66
7	DF-1010-19	Shield	1	
8	30-1510-42	Washer A	2	
9	39-0790-12	Spring washer	2	
10	39-2345-01	Bolt	2	
11	DD-1011-87	Tail Assly. Comp.	1	

PLATE No. 17: OIL PUMP

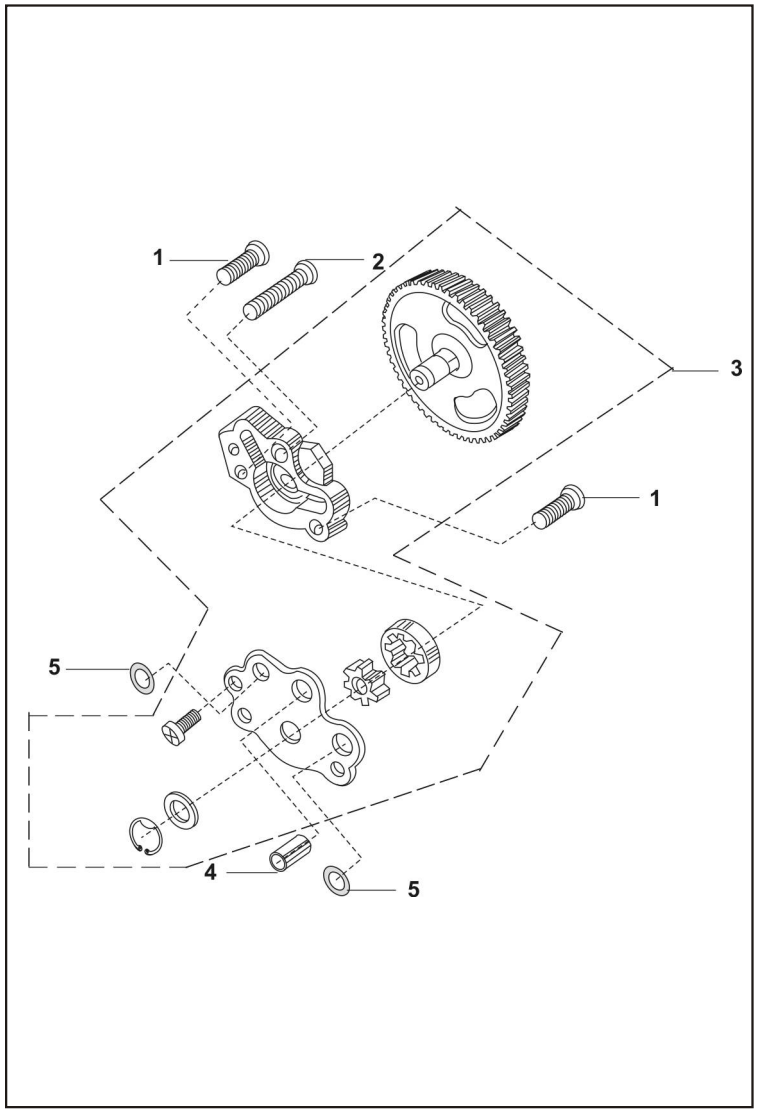

FIG. No.	PART. No.	DESCRIPTION	QTY/ VEH.	REMARKS
1	39-1078-01	Screw Pan Cros	2	
2	39-0753-01	Screw Pan Cros	1	
3	DF-1210-03	Pump Assly Oil without lug	1	
4	39-0999-06	Pin dowel	1	
5	39-1013-21	Ring “O”	2	

PLATE No. 18: MAGNETO ASSLY (INEL)

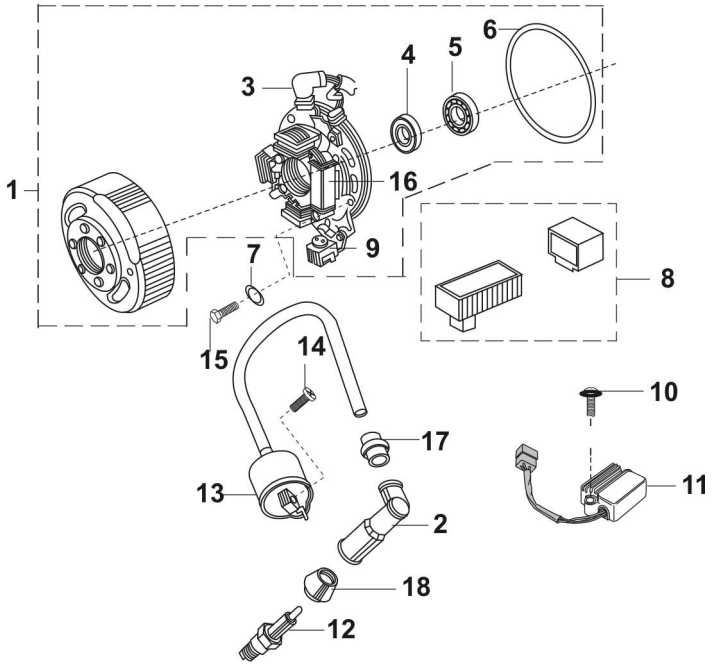

FIG. No.	PART. No.	DESCRIPTION	QTY/ VEH.	REMARKS
1	DF-1110-07	Magneto assly/Brg & Oil Seal	1	
2	31-1110-28	Cap spark plug	1	
3	31-1110-21	Stator assly	1	
4	39-1042-19	Seal Oil(HTA make)	1	
5	39-1003-20	Bearing ball	1	
6	39-1028-21	Ring “O”	1	
7	39-1659-11	Plain washer	3	
8	31-1110-22	Ignitor assly	1	
9	31-1110-34	Pulser Coil	1	
10	39-1553-04	Flanged Bolt	2	
11	31-2010-45	Regulator/Rectifire (R/R) unit	1	
12	31-1110-05	Plug Spark (NGKC7HSA or MICO 2A)	1	
	31-1110-30	PlugSpark UR2A	1	
	31-1110-27	Plug Spark UR2AS	1	
13	TE-0066-02	Coil Ignition without cap	1	
14	39-0745-01	Screw pan cross	2	
15	39-1613-04	Bolt	3	
16	31-1110-33	Exciter coil	1	
17	DD-1110-12	Grommet	1	
18	DD-1110-11	Grommet	1	

PLATE No. 19: MAGNETO ASSLY (VARROC)

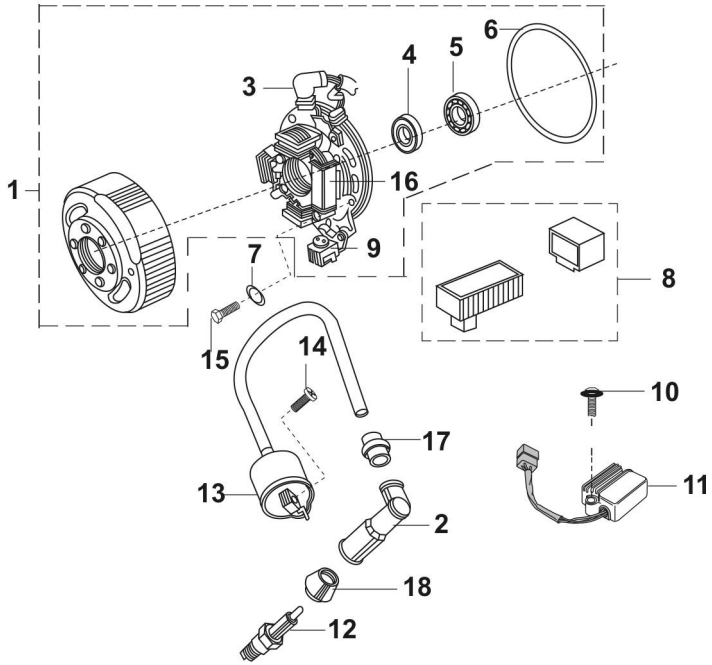

FIG. No.	PART. No.	DESCRIPTION	QTY/ VEH.	REMARKS
1	DF-1110-07	Magneto assly/Brg. & Oil Seal	1	
2	31-1110-28	Cap spark plug	1	
3	31-1110-55	Stator assly	1	
4	39-1042-19	SealOil (HTA make)	1	
5	39-1003-20	Bearing ball	1	
6	39-1028-21	Ring “O”	1	
7	39-1659-11	Plain Washer	3	
8	31-1110-52	Ignitor assly	1	
9	31-1110-58	Pulser coil assly	1	
10	39-1553-04	Flanged Bolt	2	
11	31-2010-45	Regulator/Rectifire (R/R) unit	1	
12	31-1110-05	Plug Spark(NGKC7HSA or MICO 2A)	1	
	31-1110-30	Plug Soark UR2A	1	
	31-1110-27	Plug Soark UR2AS	1	
13	TE-0066-02	Coil Ignition without cap	1	
14	39-0745-01	Screw pan cross	2	
15	DD-1013-18		3	
16	31-1110-56	Exciter coil assly	1	
17	DD-1110-12	Grommet	1	
18	DD-1110-11	Grommet	1	

PLATE No. 20: FRAME AND STAY

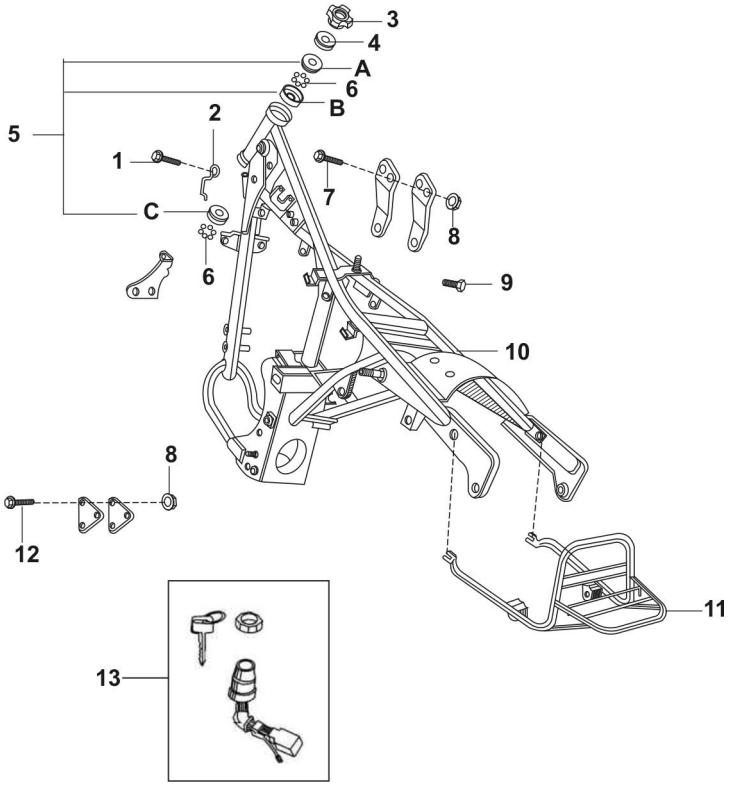

FIG. No.	PART. No.	DESCRIPTION	QTY/ VEH.	REMARKS
1	39-2473-04	Flanged Bolt	1	
2	31-1910-02	Clanp	1	
3	30-1810-11	Nut	1	
4	DF-1810-52	Cap Steering	1	
5	36-3118-03	Bearing Race kit(Set A to C)	1	Ref. Page N° 45
6	30-1810-06	Ball Steel	46	
7	39-2470-04	Flanged Bolt	3	
8	39-2479-15	Flanged nut	5	
9	39-0876-04	Bolt	1	
10	DF-1610-64	Frame Comp./Brg races	1	
11	DF-2210-08	Grip frame	1	
12	39-2469-04	Flanged Bolt	2	
13	DF-1810-24	Lock assly(4 In 1)	1	

PLATE No. 21: FRAME FITTING

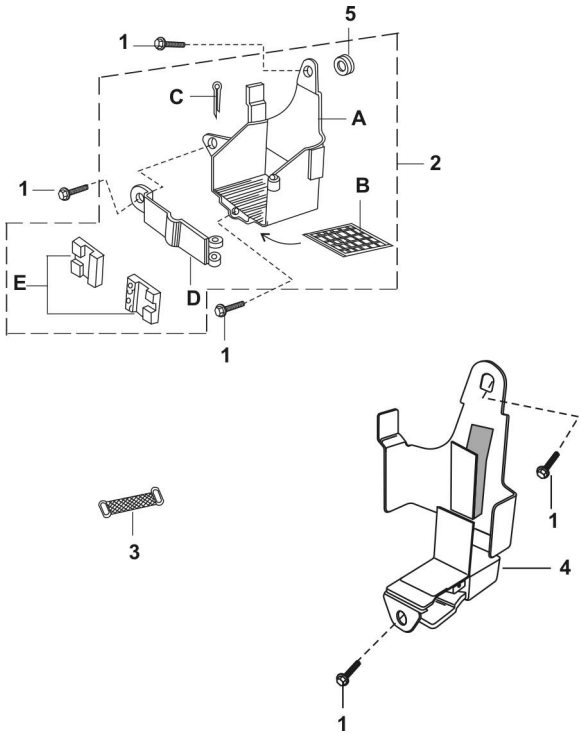

FIG. No.	PART. No.	DESCRIPTION	QTY/ VEH.	REMARKS
1	39-2473-04	Flanged Bolt	7	
2	36-DF16-02	Case Battery kit(Set A to E)	1	Ref. Page N° 45
3	31-1410-04	Band	1	
4	31-1610-29	Bracket Assly	1	
5	30-1611-69	Grommet	1	

PLATE No. 22: SWING ARM/REAR SHOCK ABSORBER

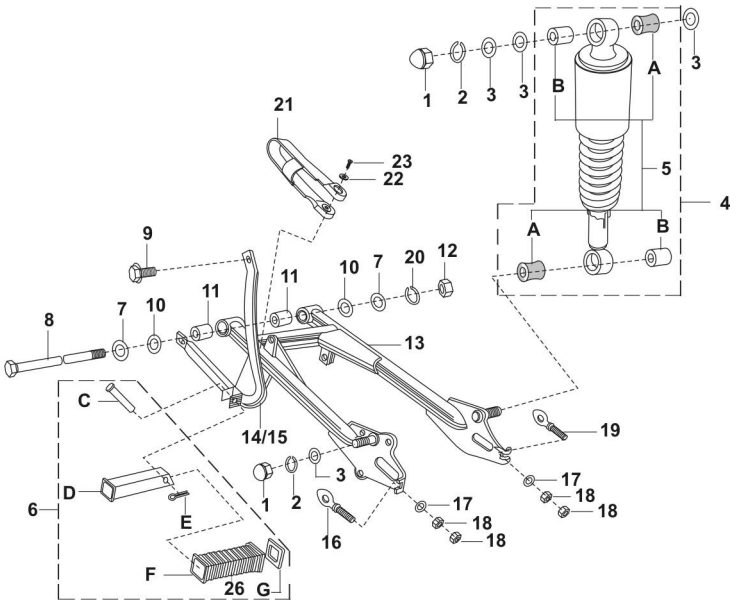

FIG. No.	PART. No.	DESCRIPTION	QTY/ VEH.	REMARKS
1	39-0712-15	Domed Cap Nut	4	
2	39-0737-12	Washer Spring	4	
3	39-0714-11	Washer Plain	8	
4	DF-1710-01	Rear Shock Absorber	2	
5	36-DF17-01	Rubber & Inner Bush Kit	1	(Set A & B) Ref. Page N° 45
6	36-DF16-03	Step RR Kit	2	(Set C & G) Ref. Page N° 45
7	39-0248-11	Plain Washer	2	
8	31-1710-06	Shaft Swing Arm	1	
9	39-2481-04	Flanged Bolt	2	
10	39-0201-11	Plain Washer	2	
11	30-1710-18	Bushing Rubber	2	
12	39-0708-15	Nut Hex	1	
13	31-1710-01	Arm Comp.Swing / Bush	1	
14	DF-1610-49	Stay (LH)	1	
15	DF-1610-50	Stay(RH)	1	
16	31-1510-33	Adjuster Chain (RH)	1	
17	39-0711-11	Washer Plain	2	
18	39-0292-15	Hex Nut	4	
19	31-1510-32	Adjuster Washer	1	Alt. to 15-1510-62
20	39-0789-12	Spring Washer	1	
21	31-1710-12	Damper for Swing arm	1	
22	39-0454-11	Plain washer	2	
23	39-0553-02	Self tapping Screw	2	
26	DF-1610-98	Damper Step Rubber	2	

PLATE No. 23: STAND AND STEP

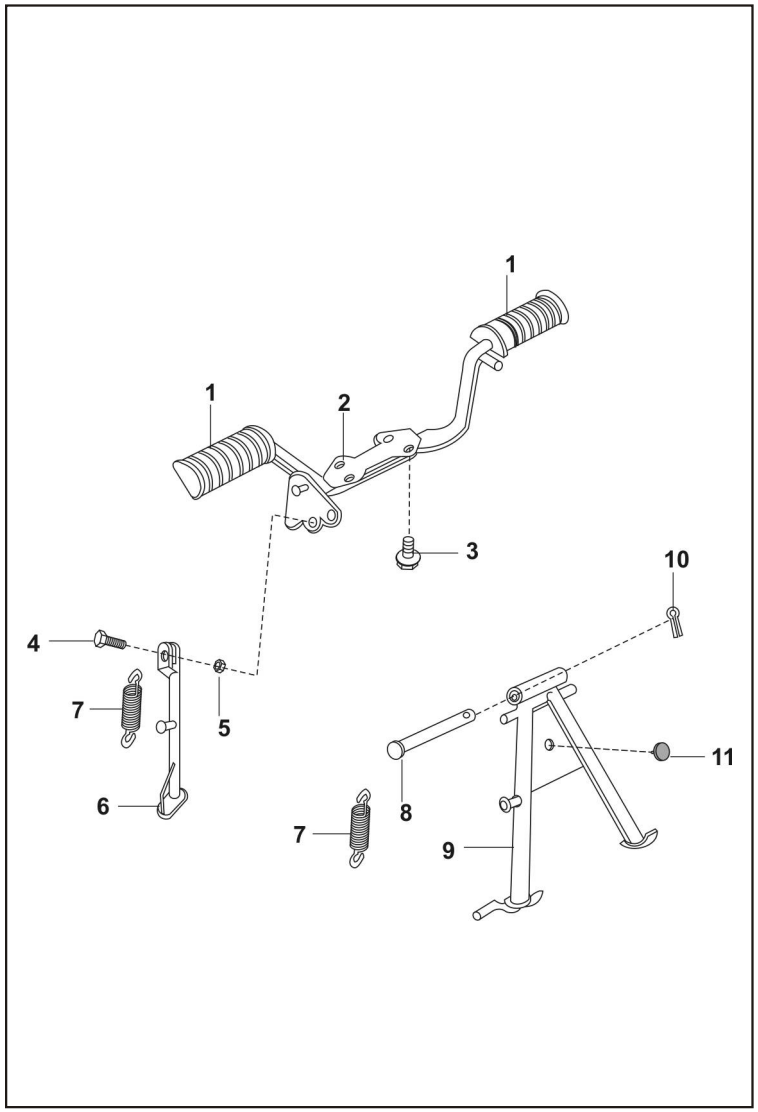

FIG. No.	PART. No.	DESCRIPTION	QTY/ VEH.	REMARKS
1	DF-1610-96	Damper	2	
2	DD-1610-76	Holder Step	1	
3	39-1940-04	Flanged Bolt	4	
4	DF-1611-02	Bolt	1	
5	39-0422-15	Nyloc Nut	1	
6	DL-1610-48	Stand Side	1	
7	30-1611-58	Spring	2	
8	30-1611-57	Shaft Stand	1	
9	DL-1610-85	Stand Centre	1	
10	39-0787-08	Pin Cotter	1	
11	DG-1611-24	Damper	1	

PLATE No. 24: FENDER (MUDGUARD)

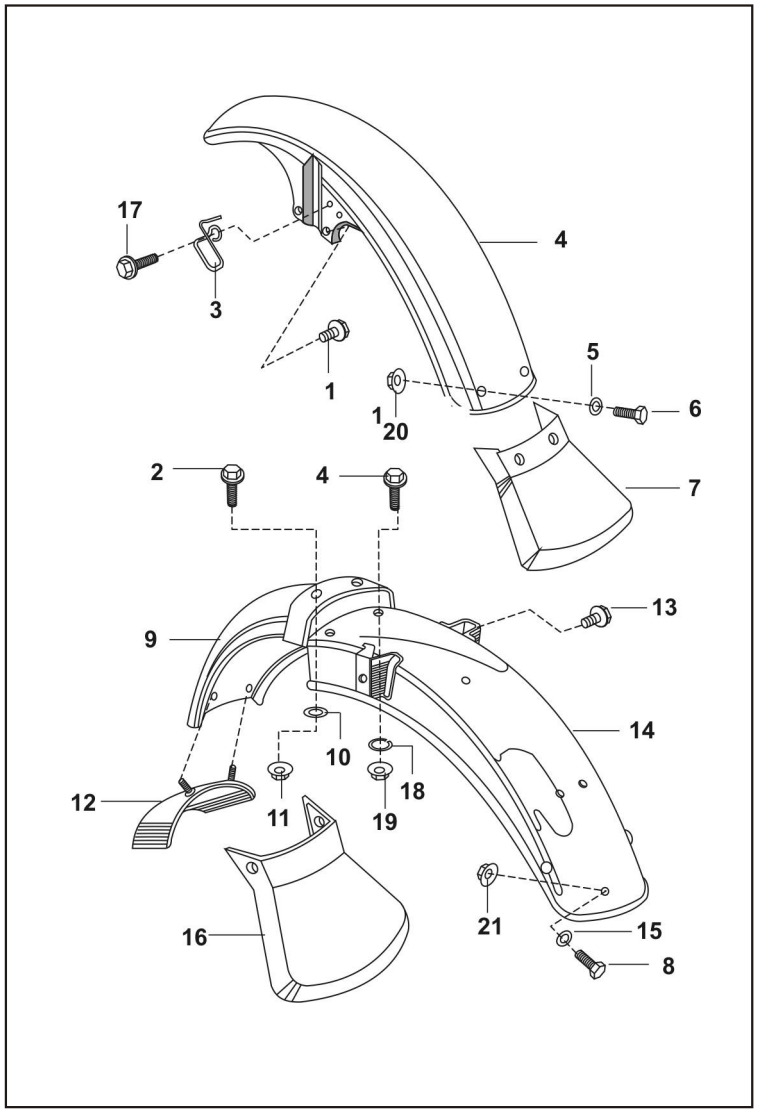

FIG. No.	PART. No.	DESCRIPTION	QTY/ VEH.	REMARKS
1	39-2222-04	Flanged Bolt	4	
2	39-2483-04	Flanged Bolt	3	
3	DF-1910-20	Clamp	1	
4	30-1611-18	Fender Assly Front	1	
5	39-0197-11	Plain Washer	2	
6	22-1504-35	Bolt	2	
7	31-1612-78	Mud Flap Front	1	
8	39-0062-04	Bolt	4	
9	30-1611-24	Fender Rear Front	1	
10	39-0711-11	Washer	2	
11	39-0817-16	Flanged Nut	2	
12	DD-1610-51	Flap Fender Rear Fr.	1	
13	39-2481-04	Flanged bolt	2	
14	30-1613-24	Fender Complete Rear	1	
15	39-0198-11	Plain Washer	2	
16	31-1611-95	Mud Flap Rear	1	
17	39-2473-04	Flanged bolt	2	
18	39-0732-12	Spring washer	2	
19	39-0292-15	Hex. Nut	2	
20	39-2484-15	Flanged nut	2	
21	39-2485-15	Flanged nut	2	

PLATE No. 25: WHEEL RIM / SPOKES / TYRE / TUBE

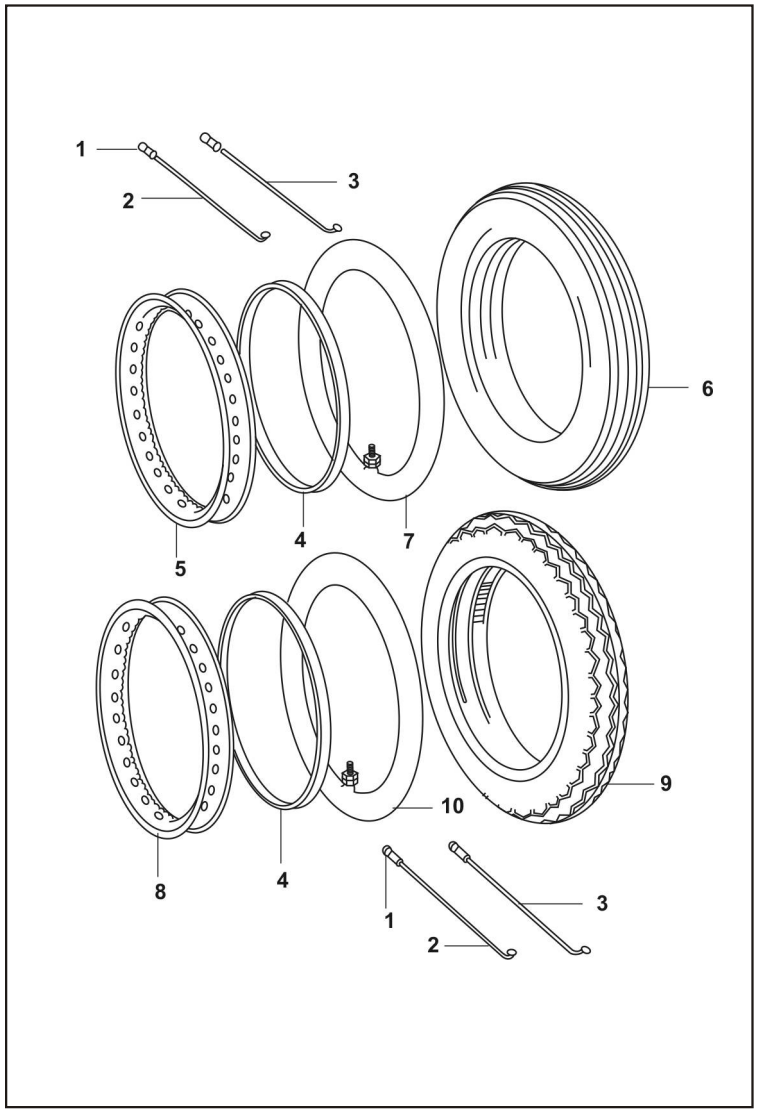

FIG. No.	PART. No.	DESCRIPTION	QTY/ VEH.	REMARKS
1	16-1510-66	Nipple Spoke	72	
2	DF-1510-05	Spoke Inner	36	Ref. Page N° 45
3	DF-1510-06	Spoke Outer	36	
4	30-1510-29	Band Rim	2	
5	DF-1510-04	Wheel Rim(FRONT 1.4x18)	1	
6	DF-1510-10	Wheel Rim (REAR 1.85 x 18)	1	
7	41070-2518-NR2/18	Tyre Front 250x18 IRC SPORT	1	
	41070-2518-NR53/18	Tyre Front 250x18 IRC PISTERA		OPTION
	41070-2518-SP1/19	Tyre Front 250x18 MAXING SPORT		OPTION
8	41075-2218/18	Tube 2.25-2.50X18 IRC	1	
	41075-2218/23	Tube 2.25-2.50X18 MAXI ONE		OPTION
9	41070-3018-NR1/18	Tyre Rear 3.00X18 IRC SPORT	1	
	41070-3018-NR53/18	Tyre Rear 3.00X18 IRC PISTERA		OPTION
	41070-3018-SP1/19	Tyre Rear 3.00X18 MAXING PISTERA		OPTION
10	41075-2718/18	Tube 2.75-3.00X18 IRC	1	
	41075-2718-CN/19	Tube 2.75-3.00X18 MAXING		OPTION
	41075-2718/23	Tube 2.75-3.00X18 MAXI ONE		OPTION

PLATE No. 26: FRONT HUB

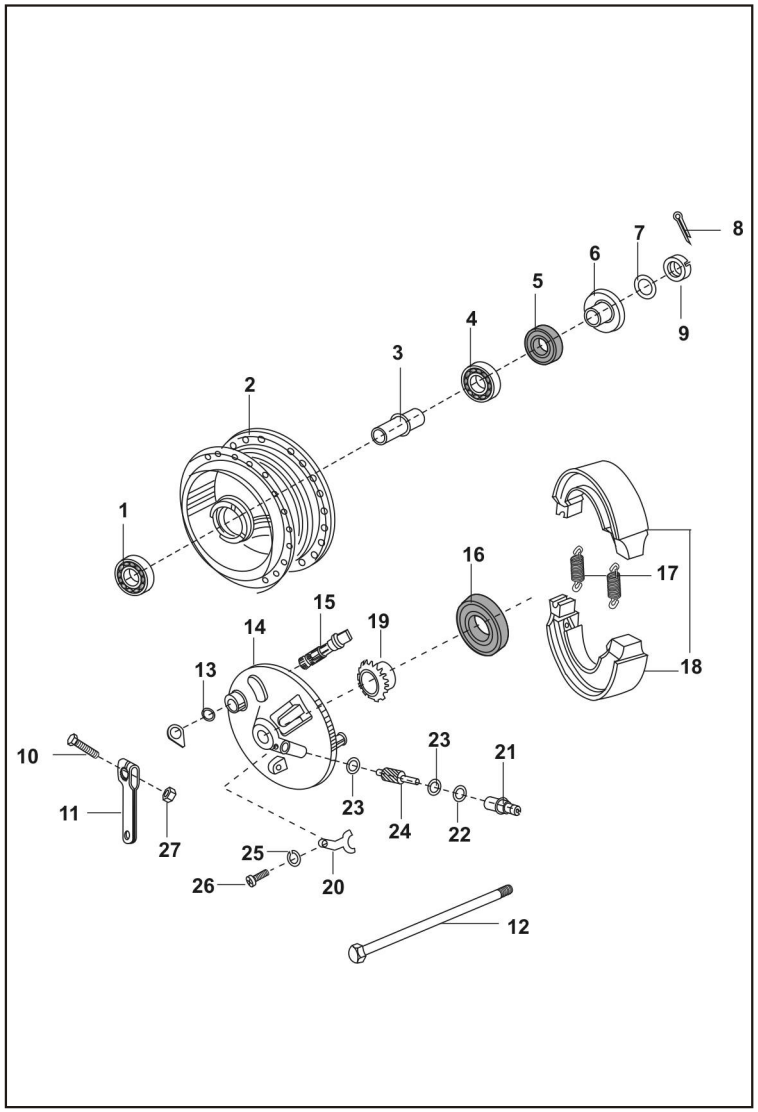

FIG. No.	PART. No.	DESCRIPTION	QTY/ VEH.	REMARKS
1	39-1006-20	Bearing Ball	1	
2	DF-1510-03	Drum Front	1	
3	31-1510-04	Collar	1	
4	39-1004-20	Bearing Ball	1	
5	14-1510-21	Oil Seal	1	
6	31-1510-56	Collar Axle Assly	1	
7	39-0248-11	Plain Washer	1	
8	39-0990-08	Pin Cotter	1	
9	39-0981-15	Nut Castle	1	
10	39-0775-04	Bolt	1	
11	DD-1510-08	Lever Brake Camp	1	
12	31-1510-36	Axle	1	
13	30-1510-38	Ring “O”	1	
14	31-1510-39	Panel Front Brake	1	
15	31-1510-11	Cam Brake	1	
16	31-1510-14	Oil Seal	1	
17	30-1510-37	Spring	2	
18	31-1510-60	Shoe Brake Assly	2	
19	31-1510-64	Speedometer Gear(Plastic)	1	
20	30-1511-18	Stopper for Bushing	1	
21	30-1511-19	Bushing	1	
22	39-1013-21	Ring “O”	1	
23	30-1510-42	Washer “A”	2	
24	30-1510-41	Gear Meter Screw	1	
25	39-0900-12	Washer Spring	1	
26	39-0840-01	ScrewPan Cross	1	
27	39-0798-15	Nut	1	

PLATE No. 27: REAR HUB

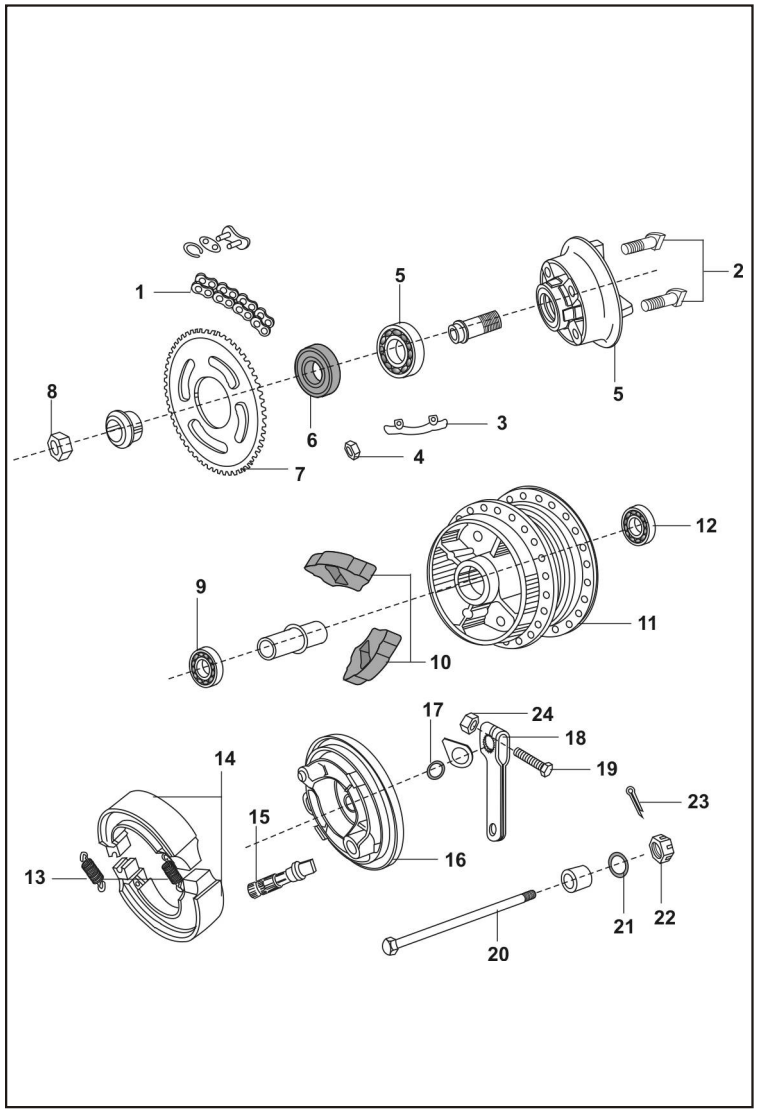

FIG. No.	PART. No.	DESCRIPTION	QTY/ VEH.	REMARKS
1	31-1510-82	Chain	1	
2	39-0978-04	Bolt	4	
3	31-1510-29	Washer	2	
4	39-0794-15	Nut Hex. Fine	4	
5	39-2240-20	Bearing Ball	1	
6	30-1510-82	Seal Oil	1	
7	31-1510-43	Sproket	1	
8	39-0988-15	Nut Hex.	1	
9	39-2362-20	Bearing Ball	1	
10	31-1510-21	Shock Damper	4	
11	31-1510-16	Drum Rear	1	
	DF-1510-09	Drum Rear	1	From Dec.2001
12	39-2396-20	Bearing Ball	1	
13	30-1510-69	Spring	2	
14	31-1510-60	Shoe Brake Assly	1	
15	31-1510-23	Brake Camp	1	
16	31-1510-24	Panel Rear Brake	1	
17	30-1510-38	Ring “O”	1	
18	31-1510-37	Lever Brake	1	
19	39-0775-04	Bolt	1	
20	31-1510-01	Axle	1	
21	39-0714-11	Washer Plain	1	
22	39-0982-15	Nut Castle	1	
23	39-0787-08	Pin Cotter	1	
24	39-0798-15	Hex. nut	1	

PLATE No. 28: BREAK PEDAL

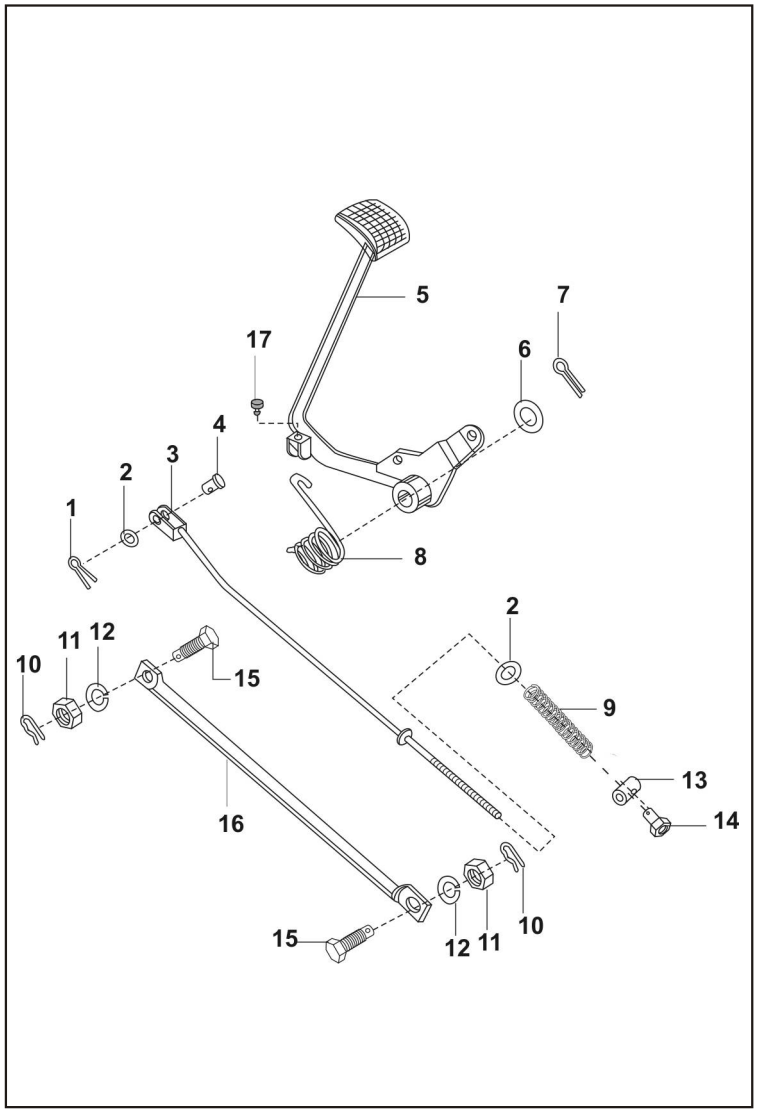

FIG. No.	PART. No.	DESCRIPTION	QTY/ VEH.	REMARKS
1	39-0808-08	Pin Cotter	1	
2	39-0198-11	Plain Washer	2	
3	31-1910-16	Rod Brake	1	
4	30-1910-38	Pin	1	
5	DD-1910-12	Lever Brake	1	
6	39-0805-11	Washer	1	
7	39-0797-08	Pin Cotter	1	
8	30-1910-31	Spring	1	
9	30-1910-35	Spring	1	
10	39-0807-08	Pin Snap	2	
11	39-0708-15	Nut Hex	2	
12	39-0189-12	Washer Spring	2	
13	15-1910-26	Pin	1	
14	30-1910-36	Brake adjuster nut	1	
15	30-1510-95	Bolt	2	
16	DF-1510-16	Torque rod	1	
17	DD-1610-78	Damper	1	

PLATE No. 29: HANDLE BAR

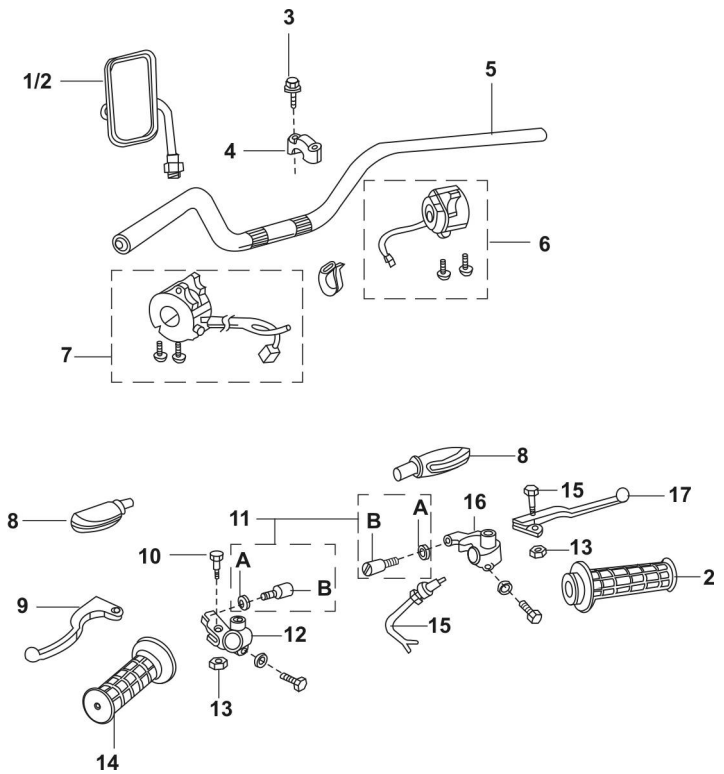

FIG. No.	PART. No.	DESCRIPTION	QTY/ VEH.	REMARKS
1	DF-2210-01	Mirror assly RH	1	
2	DD-1910-16	Grip Assly RH	1	
3	39-1714-04	Flanged Bolt	4	
4	30-1810-03	Holder Handle	2	
5	31-1810-54	Handle	1	
6	DF-2010-53	Control Switch RH	1	
7	DF-2010-61	Control Switch LH	1	
8	30-1910-30	Boot	2	
9	DF-1910-12	Lever Grip, Left	1	
10	39-0830-01	Screw pan cross	2	
11	36-DF19-01	Screw & Nut kit	2	(Set A & B) Ref. Page N° 45
12	30-1910-22	Holder Left Hand	1	
13	39-1184-15	Self Locking Nut	2	
14	DD-1910-18	Grip LH	1	
15	31-2010-78	Switch	1	Lockable Coupler
16	30-1910-14	Holder Right Hand	1	
17	DD-1910-14	Lever Grip, Right	1	

PLATE No. 30: FORK FRONT

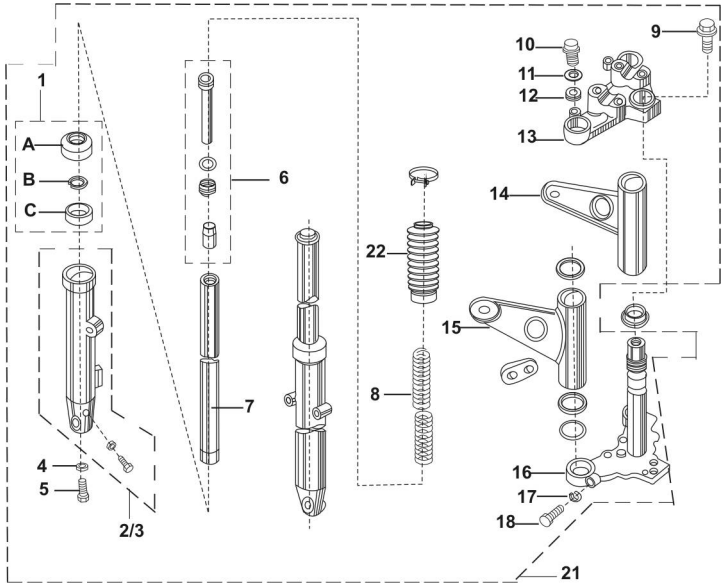

FIG. No.	PART. No.	DESCRIPTION	QTY/ VEH.	REMARKS
1	36-DF18-01	Seal Oil Kit	1	Ref. Page N° 46
2	DD-1810-10	Pipe Left Fork Outer	1	
3	DD-1810-14	Pipe Right Fork Outer	1	
4	30-1810-26	Gasket	2	
5	30-1810-25	Bolt	2	
6	31-1810-15	Cyl. Complete Fork	2	
7	31-1810-14	Pipe Fork Inner	2	
8	31-1810-17	Spring Front Fork	2	
9	30-1810-44	Bolt	1	
10	30-1810-30	Bol Fork	2	
11	30-1810-29	Ring “O”	2	
12	30-1810-28	Seat Fork Spring	2	
13	30-1810-43	Holder Fork Upper	1	
14	DF-1810-32	Cover Fork RH	1	
15	DF-1810-31	Cover Fork LH	1	
16	DF-1810-20	Holder Fork Under	1	
17	39-0789-12	Washer Spring	2	
18	39-1813-04	Bolt Hex	2	
21	DF-1810-28	Fork Front	1	
22	DL-1810-38	Boot	2	

PLATE No. 31: PAINTED PARTS

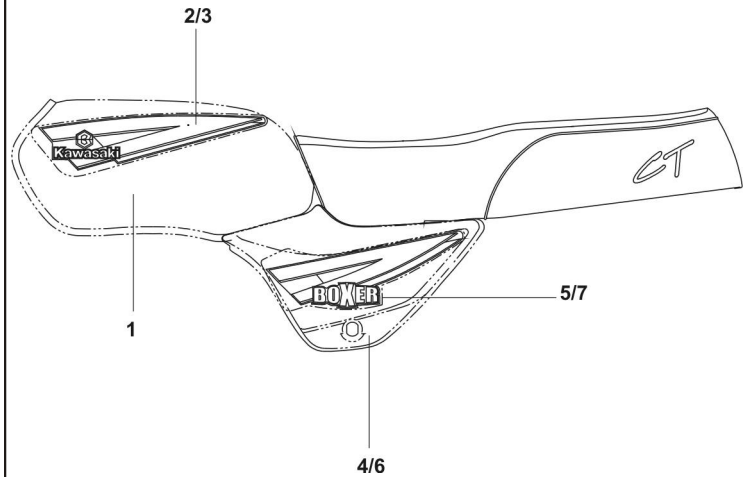

FIG. No.	PART. No.	DESCRIPTION	QTY/ VEH.	REMARKS
1	DF-1410-95	Petrol Tank with Decal	1	Jet Black
	DF-1410-98	Petrol Tank with Decal	1	Wine Red
2	DF-1410-96	Tank Decal LH	1	Jet Black
	DF-1410-99	Tank Decal LH	1	Wine Red
3	DF-1410-97	Tank Decal RH	1	Jet Black
	DF-1411-00	Tank Decal RH	1	Wine Red
4	DF-1610-69	Cover Side Left with Decal	1	Jet Black
	DF-1610-81	Cover Side Left with Decal	1	Wine Red
5	DF-1610-70	Cover Side Decal LH	1	Jet Black
	DF-1610-82	Cover Side Decal LH	1	Wine Red
6	DF-1610-71	Cover Side Right with Decal	1	Jet Black
	DF-1610-83	Cover Side Right with Decal	1	Wine Red
7	DF-1610-72	Cover Side Decal RH	1	Jet Black
	DF-1610-84	Cover Side Decal RH	1	Wine Red

PLATE No. 32: FUEL TANK CAP, TAP ASSLY, FUEL FILTER

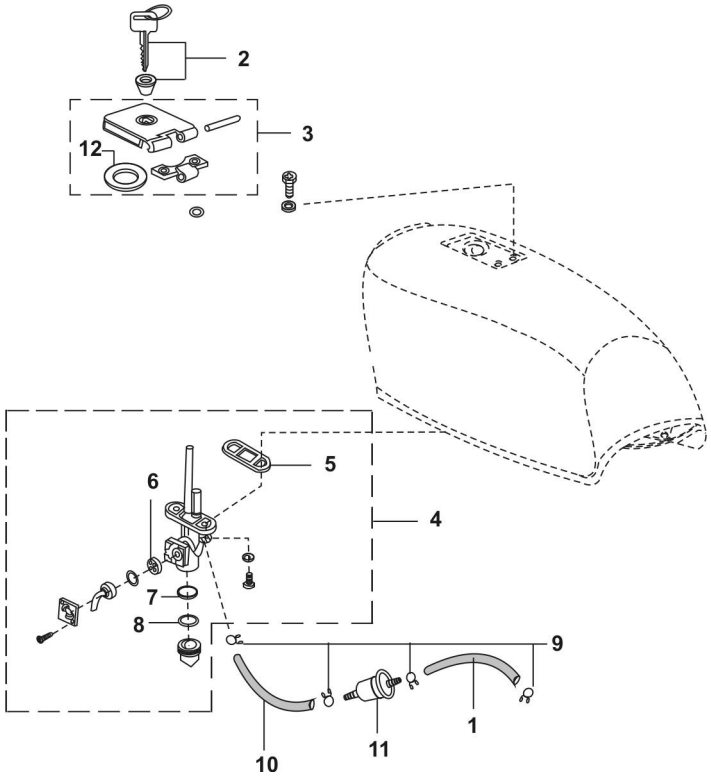

FIG. No.	PART. No.	DESCRIPTION	QTY/ VEH.	REMARKS
1	DL-1210-04	Tube Fuel	1	
2	DF-1410-71	Rotor with key	1	
3	30-1410-51	Cap Assly Tank	1	
4	DD-1410-21	Tap assly	1	
5	30-1410-39	Packing	1	
6	DD-1411-21	Packing	1	
7	30-1410-49	Packing	1	
8	30-1410-48	Filter	1	
9	31-1410-06	Clamp Tube	4	
10	DD-1210-14	Tube Fuel	2	
11	DD-1210-13	Filter Fuel	1	
12	30-1410-52	Packing	1	

PLATE No. 33: CHAIN CASE

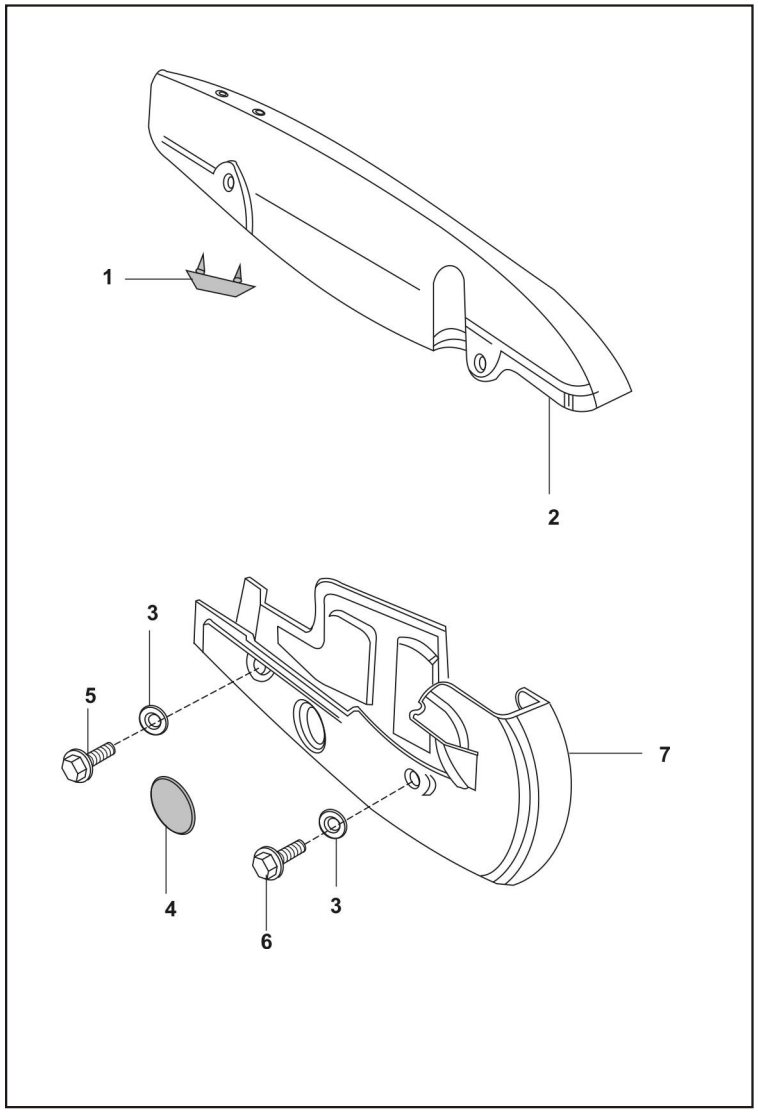

FIG. No.	PART. No.	DESCRIPTION	QTY/ VEH.	REMARKS
1	30-1612-71	Rubber Pad	1	
2	DF-1611-14	Case Chain Upper	1	
3	39-0219-11	Washer Plain	2	
4	15-1610-69	RTubber Cap	1	
5	39-2475-04	Flanged Bolt	2	
6	39-2473-04	Flanged Bolt	2	
7	DF-1611-15	Case Chain Lower	1	

PLATE No. 34: FITTINGS - PETROL TANK & SIDE COVER

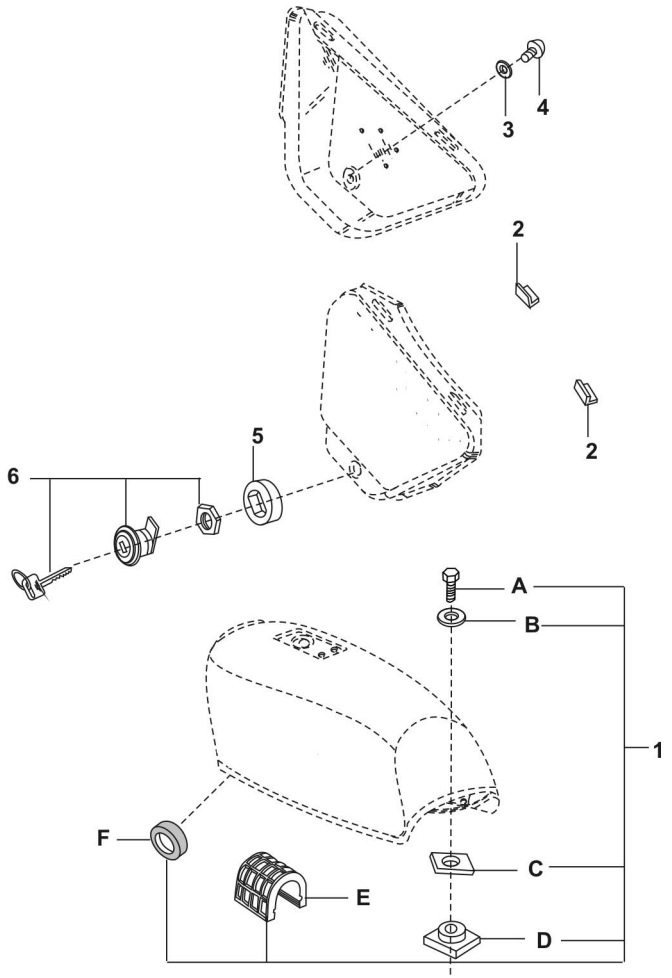

FIG. No.	PART. No.	DESCRIPTION	QTY/ VEH.	REMARKS
1	36-DF14-12	Damper Kit(Set A to F)	1	Ref. Page N° 46
2	30-2110-01	Damper	4	
	30-1611-69	Grommet side cover mtg	2	From Dec.2001
3	39-1789-24	Washer	1	
4	DG-1611-21	Screw	1	
5	31-1610-18	Damper	1	
6	31-1611-71	Lock for side cover with keys	1	

PLATE No. 35: METER ASSEMBLY

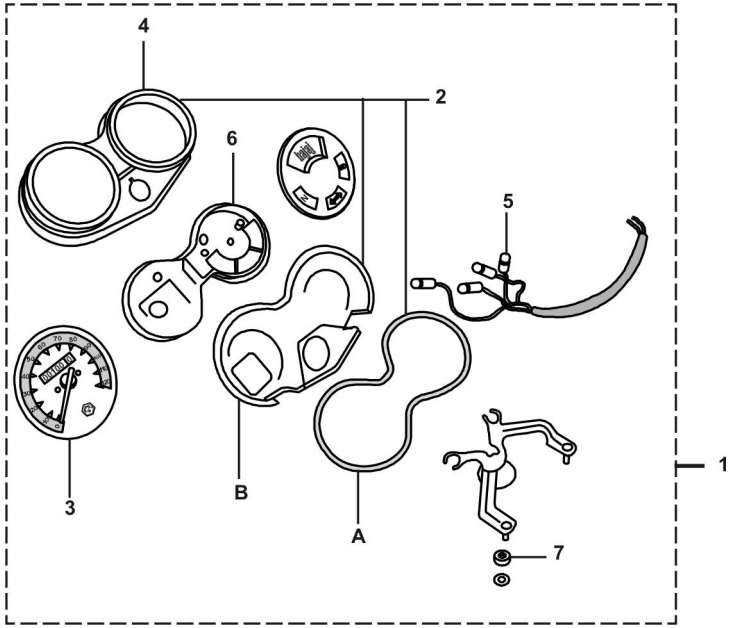

FIG. No.	PART. No.	DESCRIPTION	QTY/ VEH.	REMARKS
1	DF-1910-03	Meter Assly/ Lamp	1	
2	36-DF19-03	Cover Meter kit (Set A,B & 4)	1	Ref. Page N° 46
3	DF-1910-39	Speedometer (VDO)	1	
4	DL-1910-32	Cover Meter Case Upper (Black)	1	VDO
5	DL-1910-20	Lamp 12V 3W W/out cap	4	
6	DL-1910-34	CaseInner(White) VDO	1	
7	39-0817-15	Nut	2	
	39-0292-15	Hex Nut	2	Alt to 39-0817-15
	39-0849-14	Toothed Washer	2	Alt to 39-0817-15

PLATE No. 36: CONTROL CABLES

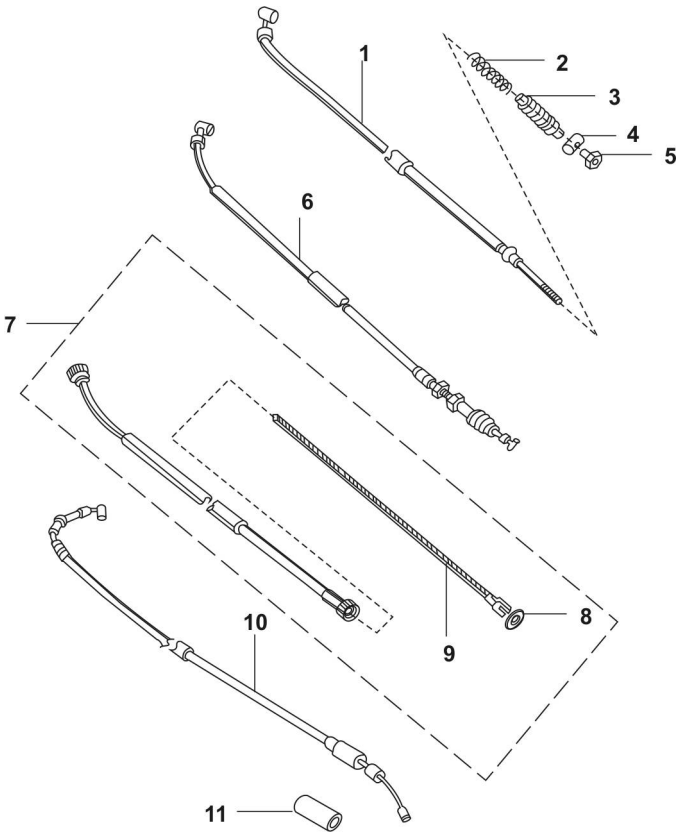

FIG. No.	PART. No.	DESCRIPTION	QTY/ VEH.	REMARKS
1	DF-1910-10	Cable Brake(FR)	1	
2	30-1910-70	Spring	1	
3	30-1910-69	Dust Seal	1	
4	30-1910-71	Rod End	1	
5	30-1910-72	Adjusting Nut	1	
6	DF-1910-09	Cable Clutch	1	
7	DF-1910-16	Cable Speedometer	1	
8	30-1910-67	Oil Seal	1	
9	DF-1910-17	Inner Cable Speedo	1	
10	31-1910-27	Cable Throttle	1	
11	31-1910-32	Accelerator boot	1	

PLATE No. 37: HEAD LAMP ASSLY

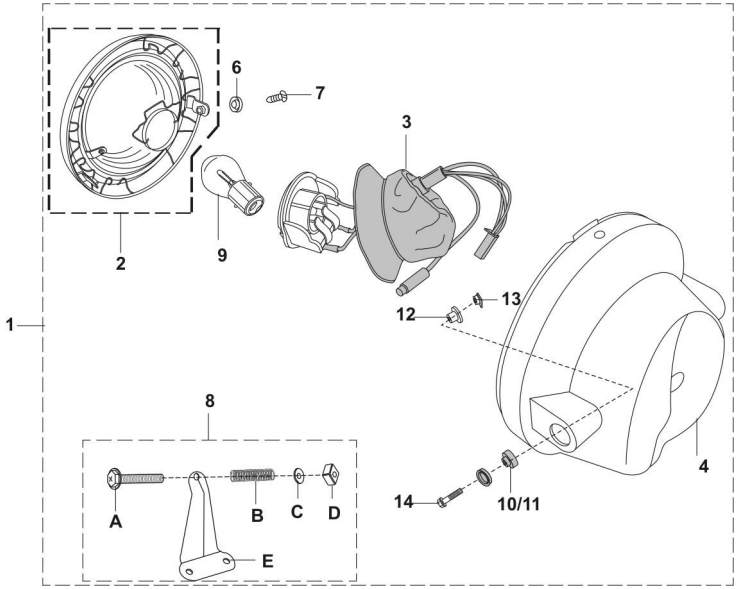

FIG. No.	PART. No.	DESCRIPTION	QTY/ VEH.	REMARKS
1	DF-2010-81	Head light assly with lamp	1	
2	DF-2010-36	Head Light/Rim	1	
3	DF-2010-58	Lamp Holder assly	1	
4	DF-2010-65	Head Light Housing	1	
6	39-1684-12	Spring Washer	2	For Rim mounting
7	DD-2010-06	Screw (For Rim mounting)	2	Rim mounting
8	36-DF20-02	Bkt.Heat Light Kit	1	(Set A to E)Ref. Page N° 46
9	DF-2011-64	Lamp 12V -35/35 W	1	
10	DD-2010-09	Damper (H.L. Mounting)	2	
11	DD-2010-10	Damper (H.L. Mounting)	2	
12	DD-2010-07	Collar(H.L.Mounting)	2	
13	39-0694-15	Hex Lock Nut(H.L. Mounting)	2	
14	39-1683-04	Flange Bolt(H.L. Mounting)	2	

PLATE No. 38: TURN SIGNAL LAMP

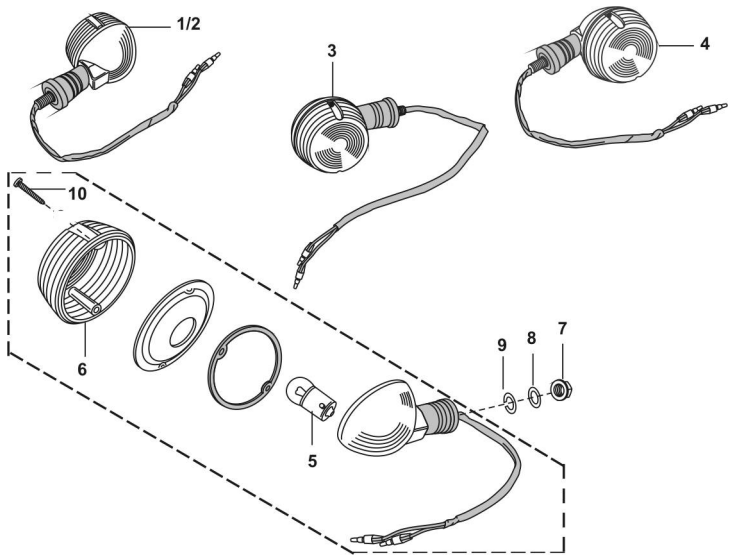

FIG. No.	PART. No.	DESCRIPTION	QTY/ VEH.	REMARKS
1	DF-2010-44	Dir.ind.Front RH with Lamp	1	
2	DF-2010-43	Dir.ind.Front RH with Lamp	1	
3	DF-2010-45	Dir.ind,Rear LH with Lamp	1	
4	DF-2010-46	Dir.ind. Rear TH with Lamp	1	
5	06-2010-83	Bulb 12V 10W	4	
6	DG-2010-52	Lens	4	
7	39-0794-15	Hex Nut with flange	4	
8	39-1305-11	Plain washer	4	
9	39-0789-12	Spring washer	4	
10	DF-2010-77	Screw	4	

PLATE No. 39: TAIL LAMP ASSLY

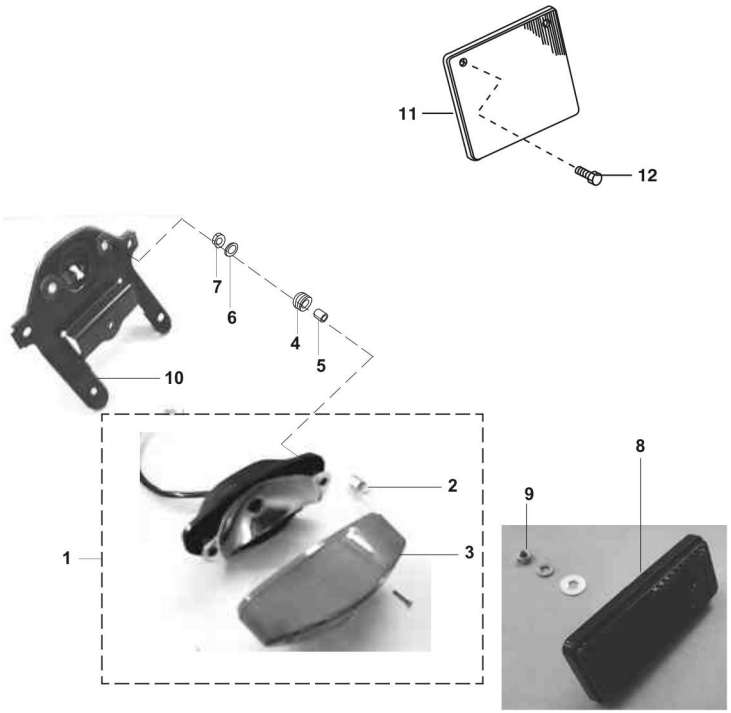

FIG. No.	PART. No.	DESCRIPTION	QTY/ VEH.	REMARKS
1	DL-2010-02	Tail Light / Lamp	1	
2	31-2010-28	Lamp 12V 10/5 W	1	
3	DL-2010-93	Lens	1	
4	DD-2010-11	Damper	2	For Mtg Tail light on Bkt.
5	30-2110-05	Collar	2	
6	39-2429-11	Plain Washer	2	
7	39-2430-15	Hex Nut, / Flange M6	2	
8	DD-2010-02	Reflector Reflex	1	
9	39-0291-15	Hex Nut M5	1	
10	DF-1610-59	Bracket tail lamp	1	
11	CF-1611-10	Plate N° RR(Rear)	1	
12	39-2482-04	Flanged Bolt	2	

PLATE No. 40: ELECTRICAL EQUIPMENT

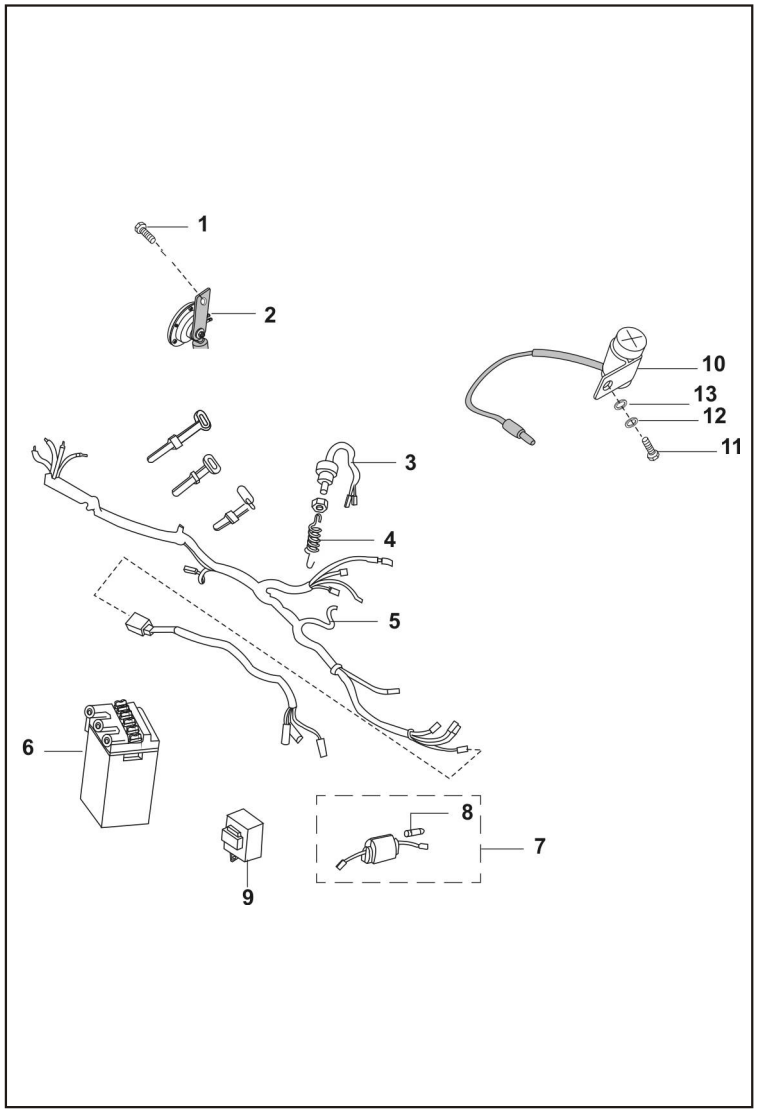

FIG. No.	PART. No.	DESCRIPTION	QTY/ VEH.	REMARKS
1	39-1940-04	Flanged Bolt	1	
2	31-2010-08	Horn	1	
3	31-2010-79	Switch Rear Brake	1	
4	30-2010-74	Spring Brake Switch	1	Alt. DD-1910-13
5	DF-2010-60	Wiring Harness	1	
6	DD-2011-06	Battery	1	
7	30-2010-60	Fuse - Assly	1	
8	30-2010-85	Fuse, 15A	1	
9	31-2010-03	Relay assly	1	Alt. To 31-2011-04
10	DD-2010-24	Condenser	1	
11	39-1079-01	Hex Screw	1	
12	39-0263-12	Spring Washer	1	
13	39-0198-11	Plain washer	1	

PLATE No. 41: TOOL KIT

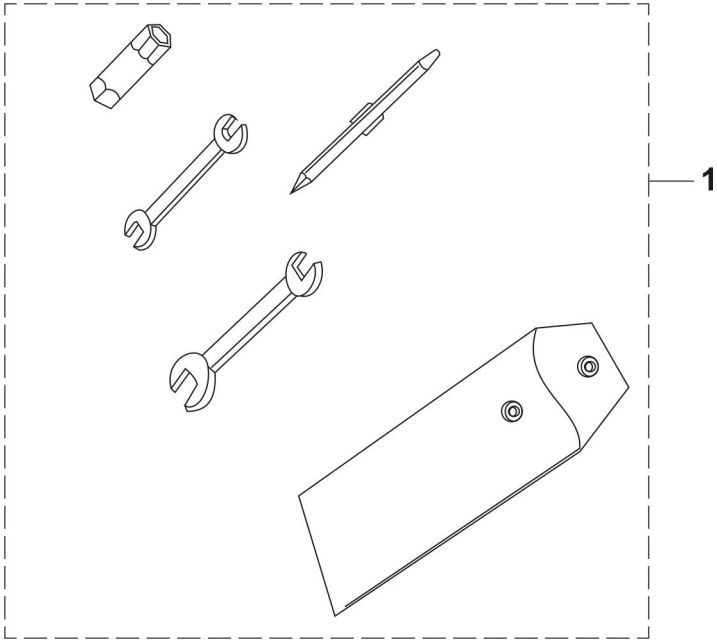

FIG. No.	PART. No.	DESCRIPTION	QTY/ VEH.	REMARKS
1	31-2210-01	Tool Kit	1	

PLATE No. 42: SEAT ASSLY

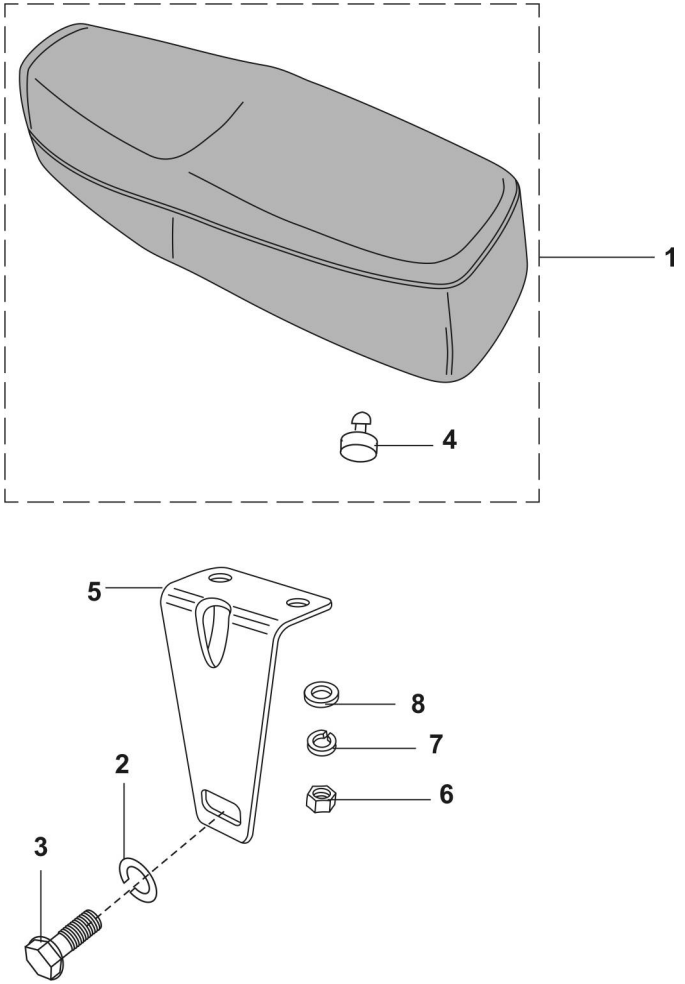

FIG. No.	PART. No.	DESCRIPTION	QTY/ VEH.	REMARKS
1	DF-2110-26	Seat assly with Damper	1	
2	39-0788-12	Washer spring	2	
3	39-1945-04	Bolt Flanged M-8	2	
4	31-2110-04	Damper	6	
5	31-2110-15	Bracket Seat	2	
6	39-0292-15	Hex Nut	4	
7	39-0732-12	Washer Spring	4	
8	39-0198-11	Plain Washer	4	

PLATE No. 43: ACCESORIES (OPTIONAL)

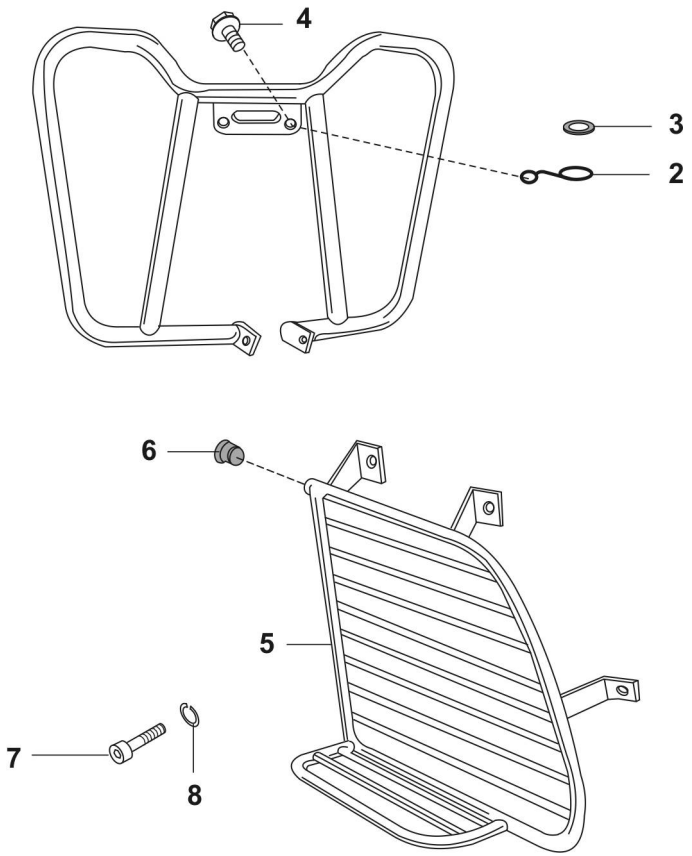

FIG. No.	PART. No.	DESCRIPTION	QTY/ VEH.	REMARKS
1	DF-2210-03	Leg guard	1	
2	DD-1910-14	Clamp(Coil Ignition)	1	
3	DD-1910-15	Clamp Rubber	1	
4	39-2221-04	Flanged Bolt	2	
5	DF-2210-27	Saree Guard	1	
6	DF-2210-06	Plug For Saree Guard	1	
7	39-1608-04	Hex soc.hd.bolt	1	
8	39-0788-12	Spring washer	1	

KITS LIST FOR BOXER "CT UG"

SN°	Kit Part N°	Kit Description	Consisting of Following Parts		
			Part N°	Description	Qty/Kit
1	36-DF10-01	O´RING KIT FOR COVER	39-1020-21	RING´O	2
			39-1016-21	RING´O	1
2	36-3110-08	COLLET SEAL OIL KIT	31-1010-19	COLLET	4
			39-1035-19	SEALOIL	2
			31-1010-45	SEAT SPRING	2
3	36-3110-28	VALVE KIT	DD-1011-34	VALVE INTAKE	1
			DD-1011-35	VALVE EXHAUST	1
4	36-3110-06	GUIDE CHAIN KIT	39-0748-01	SCREW PAN CROS	2
			39-0999-06	HOLLOW DOWEL PIN	2
			31-1010-26	GUIDE CHAIN	1
			31-1010-25	GUIDE CHAIN	1
5	36-DF10-02	TENSIONER PARTS KIT	39-1790-21	O´RING	1
			DD-1010-85	SPRING	1
			30-1010-53	CIRCLIP	1
6	36-3110-02	HOLDER FOR DRUM KIT	39-0702-01	SCREW PAN CROS	1
			31-1010-48	HOLDER	1
			39-0992-06	PIN DOWEL	6
7	36-3110-10	SPRING KIT-CHANGE MECHANISM	DD-1012-98	SPRING	1
			31-1010-54	SPRING	1
			31-1010-55	SPRING	1
8	36-3110-27	BOSS KIT SET "A" TO "E"	31-1010-44	PIN	2
			30-1012-34	SPING	2
			30-2012-36	BALL STEEL	1
			DD-1013-30	BOSS KICK	1
			39-0855-17	CIRCLIP	1
9	36-3110-20	CIRCLIP WASHER SET "F" TO "H"	39-0738-17	CIRCLIP TYPE C	4
			31-1010-39	COIL SPRING	1
			39-0995-11	WACHER	3
10	36-DF10-03	RATCHET & GEAR SET "K" & "L"	31-1010-38	RATCHET	1
			31-1012-18	GEAR SPUR	1

KITS LIST FOR BOXER "CT UG"

SN°	Kit Part N°	Kit Description	Consisting of Following Parts		
			Part N°	Description	Qty/Kit
11	36-DF12-01	SCREW(IDLING) KIT	31-1210-68	SPRING	1
			31-1012-67	SCREW(IDLING)	1
12	36-DF12-02	SCREW (AIR CONTROL) KIT	31-1210-66	SPRING	1
			31-1210-98	SCREW(AIR CONTROL)	1
13	36-DF12-03	GASKET ´O´ RING KIT	31-1210-60	TOP GASKET	1
			31-1210-74	GASKET	1
			31-1210-80	O´RING	1
16	36-DF14-11	AIR FILTER KIT SET "A" TO "C"	31-1210-42	´O´ RING - AIR FILTER	1
			31-1210-52	GASKET -AIR FILTER	1
17	36-3118-03	BEARING RACE KIT	30-1810-07	BEARING CONE	1
			30-1810-74	UPPER BEARING RACE	1
			30-1810-08	BEARING RACE	1
18	36-DF16-02	CASE BATTERY KIT	39-0986-08	PIN COTTER	1
			DD-1610-56	CASE BATTERY ASSLY	1
			31-2010-11	DAMPER	1
			31-1610-17	BAND	1
			31-1610-07	DAMPER BATTERY	2
19	36-DF17-01	RUBBER & INNER BUSH KIT	30-1710-30	RUBBER BUSH	4
			30-1710-31	INNER BUSH	4
20	36-DF16-03	STEP RR KIT	DD-1710-06	STEP RR	2
			30-1710-22	PIN	2
			39-0784-08	PIN COTTER	2
			DD-1710-11	STEP RR RUBBER	2
			30-1710-17	WASHER,STEP FITTING	2
21	36-DF15-01	SPOKE KIT (BOXER CT UG)	16-1510-66	NIPPLE SPOKE	72
			DF-1510-05	SPOKE INNER	36
			DF-1510-06	SPOKE OUTER	36
22	36-DF19-01	CABLE ADJUSTER ASSLY KIT	30-1910-17	NUT	2
			30-1910-24	SCREW	2

KITS LIST FOR BOXER "CT UG"

SN°	Kit Part N°	Kit Description	Consisting of Following Parts		
			Part N°	Description	Qty/Kit
23	36-DF18-01	SEAL OIL KIT-FRONT FORK	DD-1810-32	SEAL DUST	2
			31-1811-08	RING SNAP	2
			31-1811-07	SEAL OIL	2
24	36-DF16-04	CASE CHAIN ASSLY	31-1610-94	CASE CHAIN UPPER	1
			31-1610-11	CASE CHAIN LOWERER	1
25	36-DF14-12	DAMPER KIT FOR FUEL TANK	DL-1410-35	FLANGE BOLT	1
			39-1054-11	WASHER	1
			31-1410-05	DAMPER	1
			31-1410-09	DAMPER	2
			31-1410-37	DAMPER(FUEL TANK)	1
26	36-DF19-02	COVER METER-KIT	31-1910-17	CASE UPPER	1
			31-1910-19	RUBBER GASKET	1
			31-1910-20	COVER(WHITE)	1
			39-1210-02	CR.RES.PAN SCREW	5
			39-0900-12	WASHER SPRING	4
			39-0842-11	WASHER PLAIN SMALL	4
			39-0920-01	SCREW PAN CROS	4
			31-1910-15	DAMPER	2
			39-0814-11	WASHER	2
			39-0292-15	NUT	2
			31-1910-21	COVER LOWER BLK	1
28	36-DF19-03	COVER METER-KIT	DL-1910-32	COVER CASE UPPER	1
			DL-1910-33	COVER CASE LOWER	1
			DL-1910-37	PACKING	1
29	36-DF20-02	BRACKET HEAD LIGHT KIT	DD-2010-45	SCREW	1
			DD-2010-46	SPRING-ADJUSTER	1
			DD-2010-47	WASHER	1
			DD-2010-48	NUT(NYLON)	1
			DF-2010-64	BRACKET HEAD LIGHT	1

PART INDEX

PART No	FIG. No	PAGE No
01-1006-10	2	5
01-1106-09	8	15
01-1701-10	11	9
01-1701-11	7	9
01-1701-11	5	10
06-2010-83	5	38
14-1510-21	5	26
15-1510-62	19	22
15-1610-69	4	33
15-1910-26	13	28
16-1510-66	1	25
22-1504-35	6	24
22-1504-51	3	3
30-1010-15	16	10
30-1010-86	2	8
30-1010-96	7	12
30-1010-98	9	12
30-1011-42	15	11
30-1011-54	5	13
30-1410-39	5	32
30-1410-48	8	32
30-1410-49	7	32
30-1410-51	3	32
30-1410-52	12	32
30-1510-29	4	25
30-1510-37	17	26
30-1510-38	13	26
30-1510-38	17	27
30-1510-41	24	26
30-1510-42	8	16
30-1510-42	23	26
30-1510-69	13	27

PART No	FIG. No	PAGE No
30-1510-82	6	27
30-1510-95	15	28
30-1511-18	20	26
30-1511-19	21	26
30-1611-18	4	24
30-1611-24	9	24
30-1611-57	8	23
30-1611-58	7	23
30-1611-69	8	21
30-1611-69	2	34
30-1612-71	1	33
30-1613-24	14	24
30-1710-18	11	22
30-1810-03	4	29
30-1810-06	6	20
30-1810-11	3	20
30-1810-25	5	30
30-1810-26	4	30
30-1810-28	12	30
30-1810-29	11	30
30-1810-30	10	30
30-1810-43	13	30
30-1810-44	9	30
30-1910-14	16	29
30-1910-22	12	29
30-1910-30	8	29
30-1910-31	8	28
30-1910-35	9	28
30-1910-36	14	28
30-1910-38	4	28
30-1910-67	8	36
30-1910-69	3	36

PART No	FIG. No	PAGE No
30-1910-70	2	36
30-1910-71	4	36
30-1910-72	5	36
30-2010-60	7	40
30-2010-74	4	40
30-2010-85	8	40
30-2110-01	2	34
30-2110-05	5	39
31-1010-05	17	1
31-1010-06	2	1
31-1010-07	10	1
31-1010-14	1	16
31-1010-18	6	2
31-1010-21	1	2
31-1010-24	4	3
31-1010-33	6	3
31-1010-40	10	13
31-1010-41	11	13
31-1010-47	5	7
31-1010-51	2	7
31-1010-56	12	10
31-1010-61	4	11
31-1010-62	1	11
31-1010-67	14	11
31-1010-75	6	5
31-1010-76	5	5
31-1010-79	3	6
31-1010-80	10	6
31-1010-81	1	7
31-1010-82	5	6
31-1010-83	9	6
31-1010-84	8	6

PART No	FIG. No	PAGE No
31-1011-04	4	2
31-1011-05	4	8
31-1011-08	10	8
31-1011-13	5	11
31-1011-17	13	6
31-1011-18	10	5
31-1011-24	9	13
31-1011-30	9	1
31-1011-32	16	1
31-1011-35	5	12
31-1011-36	8	12
31-1011-44	14	12
31-1011-46	4	12
31-1011-48	13	12
31-1011-68	3	7
31-1011-73	4	5
31-1011-75	15	1
31-1011-82	3	4
31-1011-82-025/47	3	4
31-1011-82-050/47	3	4
31-1011-82-075/47	3	4
31-1011-82-100/47	3	4
31-1011-82-STD/47	3	4
31-1011-91	1	7
31-1011-92	5	7
31-1012-16	13	6
31-1012-19	6	6
31-1012-21	7	6
31-1012-35	3	2
31-1012-49	4	4
31-1012-49-025/47	4	4
31-1012-49-050/47	4	4

PART No	FIG. No	PAGE No
31-1012-49-075/47	4	4
31-1012-49-100/47	4	4
31-1012-49-STD/47	4	4
31-1012-77	13	1
31-1012-95	3	11
31-1013-14	6	4
31-1110-05	12	18
31-1110-05	12	19
31-1110-21	3	18
31-1110-22	8	18
31-1110-27	12	18
31-1110-27	12	19
31-1110-28	2	18
31-1110-28	2	19
31-1110-30	12	18
31-1110-30	12	19
31-1110-33	16	18
31-1110-34	9	18
31-1110-52	8	19
31-1110-55	3	19
31-1110-56	16	19
31-1110-58	9	19
31-1210-06	1	10
31-1210-07	7	5
31-1210-08	14	14
31-1210-14	2	15
31-1210-15	16	14
31-1210-16	3	15
31-1210-23	9	15
31-1210-28	4	15
31-1210-34	3	10
31-1210-50	1	15

PART INDEX

PART No	FIG. No	PAGE No
31-1210-55	4	14
31-1210-59	2	14
31-1210-69	10	14
31-1210-70	7	14
31-1210-71	8	14
31-1210-72	9	14
31-1210-77	11	14
31-1210-78	12	14
31-1210-79	13	14
31-1211-00	8	9
31-12-11-34	17	14
31-1211-48	1	14
31-1211-55	3	14
31-1211-66	1	14
31-1410-04	3	21
31-1410-06	9	32
31-1510-01	20	27
31-1510-04	3	26
31-1510-11	15	26
31-1510-14	16	26
31-1510-16	11	27
31-1510-21	10	27
31-1510-23	15	27
31-1510-24	16	27
31-1510-29	3	27
31-1510-32	19	22
31-1510-33	16	22
31-1510-36	12	26
31-1510-37	18	27
31-1510-39	14	26
31-1510-43	7	27
31-1510-56	6	26

PART No	FIG. No	PAGE No
31-1510-60	18	26
31-1510-60	14	27
31-1510-64	19	26
31-1510-82	1	27
31-1610-18	5	34
31-1610-29	4	21
31-1611-71	6	34
31-1611-95	16	24
31-1612-78	7	24
31-1710-01	13	22
31-1710-06	8	22
31-1710-12	21	22
31-1810-14	7	30
31-1810-15	6	30
31-1810-17	8	30
31-1810-54	5	29
31-1910-02	2	20
31-1910-16	3	28
31-1910-27	10	36
31-1910-32	11	36
31-2010-03	9	40
31-2010-08	2	40
31-2010-28	2	39
31-2010-45	11	18
31-2010-45	11	19
31-2010-78	15	29
31-2010-79	3	40
31-2010-81	13	10
31-2011-04	9	40
31-2110-04	4	42
31-2110-15	5	42
31-2210-01	1	41

PART No	FIG. No	PAGE No
36-3110-02	4	7
36-3110-02	6	44
36-3110-06	1	3
36-3110-06	4	44
36-3110-08	8	2
36-3110-08	2	44
36-3110-10	3	8
36-3110-10	7	44
36-3110-20	8	13
36-3110-20	9	44
36-3110-27	6	13
36-3110-27	8	44
36-3110-28	9	2
36-3110-28	3	44
36-3118-03	5	20
36-3118-03	17	45
36-DF10-01	1	1
36-DF10-01	1	44
36-DF10-02	2	3
36-DF10-02	5	44
36-DF10-03	7	13
36-DF10-03	10	44
36-DF12-01	5	14
36-DF12-01	11	45
36-DF12-02	6	14
36-DF12-02	12	45
36-DF12-03	17	14
36-DF12-03	13	45
36-DF14-11	11	15
36-DF14-11	16	45
36-DF14-12	1	34
36-DF14-12	25	46

PART No	FIG. No	PAGE No
36-DF15-01	21	45
36-DF16-02	2	21
36-DF16-02	18	45
36-DF16-03	6	22
36-DF16-03	20	45
36-DF16-04	24	46
36-DF17-01	5	22
36-DF17-01	19	45
36-DF18-01	1	30
36-DF18-01	23	46
36-DF19-01	11	29
36-DF19-01	22	45
36-DF19-02	26	46
36-DF19-03	2	35
36-DF19-03	28	46
36-DF20-02	8	37
36-DF20-02	29	46
39-0062-04	8	24
39-0132-12	4	1
39-0189-12	12	28
39-0197-11	5	24
39-0198-11	5	1
39-0198-11	10	3
39-0198-11	2	16
39-0198-11	15	24
39-0198-11	2	28
39-0198-11	13	40
39-0198-11	8	42
39-0201-11	10	22
39-0219-11	3	33
39-0248-11	2	9
39-0248-11	7	22

PART No	FIG. No	PAGE No
39-0248-11	7	26
39-0263-12	12	40
39-0291-15	9	39
39-0292-15	18	22
39-0292-15	19	24
39-0292-15	7	35
39-0292-15	6	42
39-0422-15	5	23
39-0454-11	22	22
39-0553-02	23	22
39-0694-15	13	37
39-0702-01	5	2
39-0702-01	11	10
39-0703-11	14	10
39-0708-15	12	22
39-0708-15	11	28
39-0711-11	5	15
39-0711-11	17	22
39-0711-11	10	24
39-0712-15	1	22
39-0714-11	3	22
39-0714-11	21	27
39-0732-12	9	3
39-0732-12	3	16
39-0732-12	18	24
39-0732-12	7	42
39-0737-12	2	22
39-0745-01	14	18
39-0745-01	14	19
39-0746-01	5	8
39-0747-01	6	15
39-0753-01	2	17

PART INDEX

PART No	FIG. No	PAGE No
39-0775-04	10	26
39-0775-04	19	27
39-0787-08	10	23
39-0787-08	23	27
39-0788-12	2	42
39-0788-12	8	43
39-0789-12	20	22
39-0789-12	17	30
39-0789-12	9	38
39-0790-12	9	16
39-0794-15	4	27
39-0794-15	7	38
39-0797-08	7	28
39-0798-15	27	26
39-0798-15	24	27
39-0805-11	6	28
39-0807-08	10	28
39-0808-08	1	28
39-0817-15	7	35
39-0817-15	7	35
39-0817-15	7	35
39-0817-16	11	24
39-0830-01	7	15
39-0830-01	10	29
39-0840-01	26	26
39-0849-14	7	35
39-0876-04	9	20
39-0900-12	25	26
39-0933-11	12	13
39-0972-04	15	14
39-0978-04	2	27
39-0980-04	10	12

PART No	FIG. No	PAGE No
39-0981-15	9	26
39-0982-15	22	27
39-0985-17	5	4
39-0987-17	4	6
39-0988-15	8	27
39-0989-17	11	6
39-0990-08	8	26
39-0994-11	1	6
39-0999-06	6	9
39-0999-06	9	11
39-0999-06	4	17
39-1000-06	12	1
39-1000-06	1	4
39-1003-20	5	18
39-1003-20	5	19
39-1004-20	4	26
39-1006-20	1	26
39-1008-20	10	10
39-1012-04	6	1
39-1013-21	5	17
39-1013-21	22	26
39-1017-21	14	1
39-1018-21	14	6
39-1019-21	2	11
39-1021-21	18	1
39-1023-04	2	10
39-1028-21	6	18
39-1028-21	6	19
39-1041-19	16	11
39-1042-19	4	18
39-1042-19	4	19
39-1043-19	8	10

PART No	FIG. No	PAGE No
39-1046-19	11	5
39-1050-06	6	10
39-1053-15	9	5
39-1053-15	11	12
39-1055-15	1	5
39-1056-04	4	9
39-1058-11	3	12
39-1062-04	4	10
39-1063-01	3	1
39-1066-04	7	10
39-1068-04	3	9
39-1070-01	8	3
39-1074-04	11	1
39-1074-04	7	11
39-1075-04	15	10
39-1075-04	13	11
39-1078-01	1	17
39-1079-01	11	40
39-1080-19	9	10
39-1184-15	13	29
39-1189-23	10	15
39-1225-15	1	9
39-1305-11	8	38
39-1553-04	10	18
39-1553-04	10	19
39-1608-04	7	43
39-1613-04	15	18
39-1659-11	7	18
39-1659-11	7	19
39-1672-04	8	5
39-1683-04	14	37
39-1684-12	6	37

PART No	FIG. No	PAGE No
39-1714-04	3	29
39-1789-24	3	34
39-1813-04	18	30
39-1864-20	5	9
39-1877-04	8	1
39-1920-01	2	13
39-1940-04	3	23
39-1940-04	1	40
39-1945-04	3	42
39-2040-21	11	3
39-2134-21	12	11
39-2145-15	4	16
39-2147-04	18	11
39-2221-04	4	43
39-2222-04	1	24
39-2240-20	5	27
39-2293-20	5	9
39-2345-01	10	16
39-2362-20	9	27
39-2396-20	12	27
39-2403-20	12	12
39-2429-11	6	39
39-2430-15	7	39
39-2469-04	12	20
39-2470-04	7	20
39-2473-04	1	20
39-2473-04	1	21
39-2473-04	17	24
39-2473-04	6	33
39-2474-04	8	8
39-2474-04	1	13
39-2475-04	5	33

PART No	FIG. No	PAGE No
39-2477-04	6	16
39-2479-15	8	20
39-2481-04	9	22
39-2481-04	13	24
39-2482-04	12	39
39-2483-04	2	24
39-2484-15	20	24
39-2485-15	21	24
41070-2518-NR2/18	7	25
41070-2518-NR53/18	7	25
41070-2518-SP1/19	7	25
41070-3018-NR1/18	9	25
41070-3018-NR53/18	9	25
41070-3018-SP1/19	9	25
41075-2218/18	8	25
41075-2218/23	8	25
41075-2718/18	10	25
41075-2718/23	10	25
41075-2718-CN/19	10	25
CF-1611-10	11	39
DD-1010-07	2	4
DD-1010-43	17	11
DD-1010-58	6	11
DD-1010-60	8	11
DD-1010-63	5	3
DD-1010-69	1	12
DD-1010-70	2	12
DD-1010-71	9	8
DD-1010-75	19	11
DD-1010-76	20	11
DD-1010-77	6	8
DD-1010-92	2	6

PART INDEX

PART No	FIG. No	PAGE No
DD-1010-99	6	12
DD-1011-01	17	10
DD-1011-02	13	9
DD-1011-03	14	9
DD-1011-06	7	8
DD-1011-36	12	6
DD-1011-79	7	3
DD-1011-87	11	16
DD-1012-11	7	2
DD-1012-15	5	16
DD-1012-54	3	13
DD-1012-55	7	3
DD-1012-75	10	9
DD-1012-76	7	1
DD-1012-98	11	8
DD-1013-04	1	8
DD-1013-06	2	2
DD-1013-18	15	19
DD-1013-25	11	11
DD-1013-27	4	13
DD-1013-30	13	13
DD-1013-47	6	1
DD-1013-49	8	1
DD-1013-50	7	1
DD-1013-51	11	1
DD-1013-66	6	16
DD-1110-11	18	18
DD-1110-11	18	19
DD-1110-12	17	18
DD-1110-12	17	19
DD-1210-13	11	32
DD-1210-14	10	32

PART No	FIG. No	PAGE No
DD-1410-21	4	32
DD-1411-21	6	32
DD-1510-08	11	26
DD-1610-51	12	24
DD-1610-76	2	23
DD-1610-78	17	28
DD-1810-10	2	30
DD-1810-14	3	30
DD-1910-12	5	28
DD-1910-13	4	40
DD-1910-14	17	29
DD-1910-14	2	43
DD-1910-15	3	43
DD-1910-16	2	29
DD-1910-18	14	29
DD-2010-02	8	39
DD-2010-06	7	37
DD-2010-07	12	37
DD-2010-09	10	37
DD-2010-10	11	37
DD-2010-11	4	39
DD-2010-24	10	40
DD-2011-06	6	40
DF-1010-15	12	9
DF-1010-18	10	11
DF-1010-19	7	16
DF-1010-51	3	5
DF-1110-07	1	18
DF-1110-07	1	19
DF-1210-03	3	17
DF-1410-71	2	32
DF-1410-95	1	31

PART No	FIG. No	PAGE No
DF-1410-96	2	31
DF-1410-97	3	31
DF-1410-98	1	31
DF-1410-99	2	31
DF-1411-00	3	31
DF-1510-03	2	26
DF-1510-04	5	25
DF-1510-05	2	25
DF-1510-06	3	25
DF-1510-09	11	27
DF-1510-10	6	25
DF-1510-16	16	28
DF-1610-49	14	22
DF-1610-50	15	22
DF-1610-59	10	39
DF-1610-64	10	20
DF-1610-69	4	31
DF-1610-70	5	31
DF-1610-71	6	31
DF-1610-72	7	31
DF-1610-81	4	31
DF-1610-82	5	31
DF-1610-83	6	31
DF-1610-84	7	31
DF-1610-96	1	23
DF-1610-98	26	22
DF-1611-02	4	23
DF-1611-14	2	33
DF-1611-15	7	33
DF-1710-01	4	22
DF-1810-20	16	30
DF-1810-24	13	20

PART No	FIG. No	PAGE No
DF-1810-28	21	30
DF-1810-31	15	30
DF-1810-32	14	30
DF-1810-52	4	20
DF-1910-03	1	35
DF-1910-09	6	36
DF-1910-10	1	36
DF-1910-12	9	29
DF-1910-16	7	36
DF-1910-17	9	36
DF-1910-20	3	24
DF-1910-39	3	35
DF-2010-36	2	37
DF-2010-43	2	38
DF-2010-44	1	38
DF-2010-45	3	38
DF-2010-46	4	38
DF-2010-53	6	29
DF-2010-58	3	37
DF-2010-60	5	40
DF-2010-61	7	29
DF-2010-65	4	37
DF-2010-77	10	38
DF-2010-81	1	37
DF-2011-64	9	37
DF-2110-26	1	42
DF-2210-01	1	29
DF-2210-03	1	43
DF-2210-06	6	43
DF-2210-08	11	20
DF-2210-27	5	43
DG-1014-98	9	9

PART No	FIG. No	PAGE No
DG-1611-21	4	34
DG-1611-24	11	23
DG-2010-52	6	38
DL-1210-04	1	32
DL-1610-48	6	23
DL-1610-85	9	23
DL-1810-38	22	30
DL-1910-20	5	35
DL-1910-32	4	35
DL-1910-34	6	35
DL-2010-02	1	39
DL-2010-93	3	39
TE-0066-02	13	18
TE-0066-02	13	19